Super Products®

CAMEL® MAX SERIES

COMBINATION SEWER CLEANERS

MAXIMUM SAFETY.
MAXIMUM RELIABILITY.
MAXIMUM PERFORMANCE.

800.837.9711 • WWW.SUPERPRODUCTS.COM

Super Products 50TH ANNIVERSARY

STANDARD FEATURES
AVAILABLE ON ALL UNITS

SAFETY

Highly Accomodating Front-Mounted Hose Reel

- 270° rotation, 180° rotation fully retracted
- Capable of 1000′ of 1″ diameter sewer hose
- Extends 18″

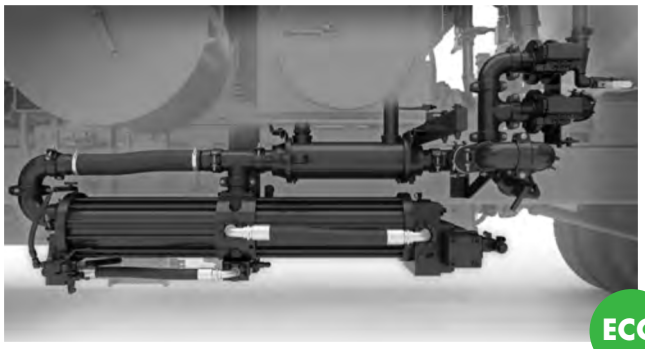

ECO

Advanced Water Pump

- Pressure sensing, double acting, single piston pump, powered by pressure & flow compensating hydraulic system
- 1:1 oil to water ratio
- Designed capacity of 100 gpm and 3000 psi
- Does not need to be removed from chassis for service

Precision Controls

- Ability to run water pump with or without vacuum
- LED panel lights enables readability in all environments at 1000 nits
- Unit Self Diagnostic

Additional Standard Features

SAFETY

Safety
- Backup Camera
- Body Up Alarm
- Boom Up Alarm
- Debris Body Safety Prop
- Safety Cones
- Sewer Hose Containment Shield
- Tailgate Alarm
- Tailgate Safety Props

Debris Body
- (1) Centrifugal Cyclone Separator: 44,000 cubic inches
- Exterior Tank Front Mounted Level Gauge
- Industrial Powder Coat Finish; White
- Internal Debris Tank Flush Out System
- Modular Designed Full Length Subframe
- Quick Release Door less than 50″ off the ground
- ¼″ Thick Debris Body EXTEN Steel Construction

Vacuum System
- Hot Shift Transfer Case
- Positive Displacement Blower
- Vacuum Blower: 3600 cfm

Water System
- Air Purge
- Antifreeze System
- Dual Accumulators
- Dual Hydraulic Cooling
- Water Tank; rotationally molded, non-cross linked, polyethylene

ECO

Boom System
- 8″ Hydraulic Boom with 8′ Hydraulic Extension
- 1000lb Boom Lifting Capacity
- 217° of Rotation
- Tube Storage, Back of Cab

Tailgate
- (4) Adjustable Hydraulic Wedge Pins
- Hydraulic Powered Tailgate

ECO

Single Engine Design

All Camel models feature a single engine design which offers:

- **Lighter Weight**
- **Up to 40% Less in Fuel Use**
- **15% Lower Operating RPM**

Camel®

The Most Versatile Combo in the Industry

Jet • Vacuum • Hydro Excavate • Wastewater Recycle • Dump • Eject

AVAILABLE MODELS

Camel 900 Dump

- Debris Body: 9 yards
- Vacuum Blower: 3600 cfm
- Water Capacity: 1000 gallons
- Debris Body: 9 yards
- Single Axle
- Length: 35′ 6″ (approx.)
- Height: 11′ 6″ (approx.)

Camel 1200 Dump
Camel 1200 Eject
Camel 1200 Wastewater Recycle

- Debris Body: 12 yards
- Vacuum Blower: 3600 cfm
- Water Capacity: 1500 gallons
- Tandem Axle
- High Dump Body
- Length: 38′ 6″ (approx.)
- Height: 11′ 11″ (approx.)

* Disclaimer: Product photos may include standard and/or optional features

UNLOADING SYSTEMS:
DUMP OR EJECT

Dump Unloading: The dump unloading system uses a telescopic hydraulic cylinder to raise the body up to a 50° angle and gravity removes the debris. This unit has **the capability to dump into a 42-inch container.** The unit still maintains a low overhead height during normal operation and a low center of gravity for increased stability.

900 and 1200 Dump

Eject Unloading: The eject unloading system is the industry's safest and most efficient removal of debris. The body raises to an 8.5° angle and the ejector plate quickly pushes out debris. This allows operators to have **the only controlled way to dump into a 48-inch container** without the need of additional containment products.

1200 Eject and WWR

SAFETY

WASTEWATER RECYCLING:
FILL IT ONCE & WORK ALL DAY

Super Products' wastewater recycling system enables operators to clean sewers without the use of fresh water.

SAVE WATER

Clean 3,000 feet of pipe a day;
SAVE 60,000 GALLONS
of water a week!

SAVE TIME

Longer onsite performance;
CLEAN 78% MORE
pipe a day!

› This equates to **2** extra work days!

1200 WWR

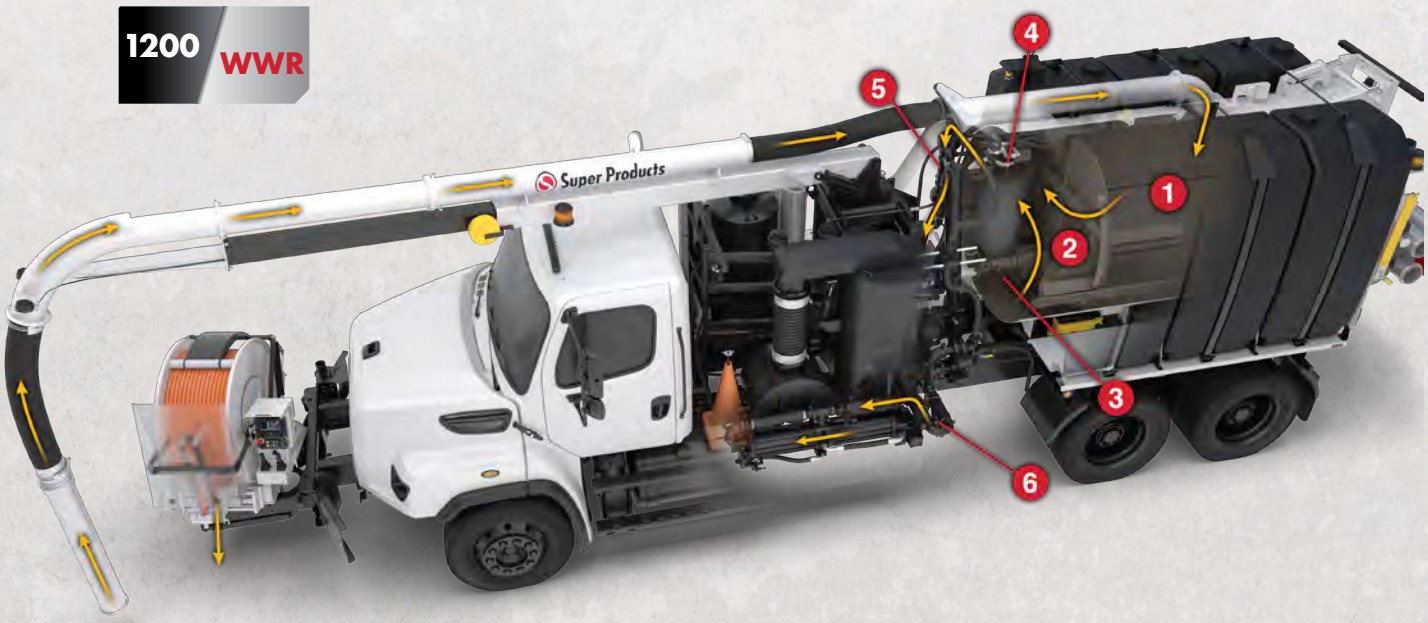

ECO

6 Stages of Wastewater Recycling

1. **Debris Tank** – Initial separation takes place as debris enters
2. **Ejector Plate** – Small clearances and passages allow liquids to pass to the bulkhead side, holding solids on the tailgate side
3. **Recycling Water Reservoir** – Controls water level on filter screen
4. **Stainless Steel Wedge Wire Filter** – Self-cleaning and oscillating
   - **a.** Constant low pressure spray bar uses recycled water to externally clean the screen
   - **b.** Intermittent high pressure spray bar uses fresh water to internally clean the screen
5. **Cyclone Separator** – Removes particles from the liquid
   - **a.** Includes an automatic continuous discharge of particles back into the debris body
6. **Y-Strainer with Stainless Steel Element** – Filters the liquid prior to the high pressure water pump

OPTIONAL FEATURES

AVAILABLILITY VARIES

Optional Features

- Fully Automatic Powered Level Wind
- Hose Reel Tensioning
- Hydrant Fill with Auto Shut Off
- Lighting Packages
- Multiple Axles
- Signboards
- Splash Shield
- Tailgate Tube Rack
- Tool Boxes
- Vacuum Blower Options up to 5500 cfm
- Winter Recirculation
- Wireless Remote

OPTION

Increase your Payload

Adding the **Pusher Axle** stretches chassis length by 12" while increasing payload capacity.

OPTION

ACCU|LEVEL
Load Sensor System

20/20 Vision for your Camel

The **ACCULEVEL®** is an innovative radar debris body level sensor that shows the true debris level. This is digitally displayed on the front mounted control panel for easy operating viewing. By monitoring this, the operator can choose to continue working, dewater or dump debris.

OPTION

Hydro Excavation

Adding the **Hydro Ex Package** to your truck will transform your Combination Sewer Cleaner into a Hydro Excavator. The package comes with (1) water handgun, (1) dig tube with nonconducting cuff, (1) rebuildable urethane coated nozzle, tailgate tube rack and other accessories to turn your Camel into a 3 in 1 mobile unit. Clean a sewer line in the morning and unearth utility lines in the afternoon.

Super Products®
An Alamo Group Company

0123