150LCX SERIES

JCB

INTRODUCING THE NEXT IN THE X SERIES

Our vision from the start was to design and engineer our most advanced tracked excavator range ever.

The new JCB 14-15 ton machines sit perfectly alongside their highly acclaimed 20 ton big brother.

Our engineering teams have once again obsessed over every minute detail of this new world-class excavator and used the same quality materials and proven components.

The result is a machine range to be taken seriously.
A machine range to be trusted.

LORD BAMFORD, CHAIRMAN, JCB

Tested to extremes.

1 JCB X-Series excavators are tested on a whole-machine shaker rig to replicate 15,000 hours of tracking and vibration.

The latest JCB dig end has been proven over countless hours on machines operating around the globe in every imaginable application.

Exhaustive testing on purpose-built electronics and electric rigs prove the reliability of connections, layout and software.

2 Windows and doors are tested with 30,000 open and close operations to prove component quality.

3 Hot and cold climate testing (131°F to -22°F) is performed in controlled conditions and real-world applications.

Exceptional build quality

4 Proven undercarriage with fully-welded X frame construction for long-term durability.

Components by the industry's leading suppliers and most trusted brands.

5 For enhanced strength, X-Series excavators feature rigid upper frames, flat revolver side skirts and double skinned doors with plated hinges.

Robust fold back mechanism for cab mirror.

Finite element analysis ensures longer life for key components.

1

4

5

2

3

Best operator environment.

1 Spacious JCB CommandPlus cab with high-quality, injection molded interior. Industry-leading Grammer seat with with 145-degree recline and wide, adjustable arm rests.

T-bars with optimized ergonomics are standard; new track pedal design with non-slip coatings.

2 For optimum control and reduced fatigue, the joystick and switch controls are mounted to pods that are suspended from the seat and move with the operator.

3 The powerful new HVAC system features 11 targeted vents for optimum performance in hot and cold environments.

A cool/heat box is standard.

4 An industry-standard isolator lever prevents accidental activation when exiting the cab.

5 A spacious luggage tray behind the operator's seat includes three independent 12V power supplies. Another handy storage space can be found at the back of the cab in the roof liner, with a hanger for the operator's hard hat.

6 Bluetooth radio is fully integrated into the control screen.

1

2

3

4

5

6

EXCELLENT CONTROL

Effortless working.

1 Proven Japanese hydraulics deliver precise and efficient control.

2 The operator can choose Auto-Stop and Auto-Idle, depending on preference.

3 Customizable proportional controls allow the operator to set speed and attachment control preferences.

A dozer option adds extra versatility.

A power boost button increases pressure by 9 percent for up to 9 seconds, to provide extra tearout in tough conditions.

4 Tracking control adjustments can be made on the joystick.

A convenient button configures a range of functions such as radio mute, camera cycle, or front screen wash.

5 Slew drive provides high torque on acceleration and braking for greater controllability and refinement.

Easier to use.

1 A start-stop button eliminates the need to turn the key to restart the machine. The start sequence enables operation within two seconds.

Numerous language options are available for the navigation menu, to suit most operators.

2 Pipework shut-off taps feature SAE fittings for quick connection of attachments.

3 An advanced tool select system improves attachment handling by monitoring pressure and flow.

Up to 10 attachments can be stored on the machine.

4 The 150X features an easy quick hitch with an override for removing large breakers or fork attachments.

5 Available options include a fitting to accommodate a GPS system, including 2D and 3D Topcon, Trimble and Leica models.

6 The cab has mounting points for protective guards and features flat front glass for easy replacement when needed.

EXPERIENCE GREATER PERFORMANCE

Best-in-class productivity.

1 Large diameter hydraulic pipes and hoses increase productivity and efficiency. An innovative hydraulic regeneration system recycles oil across the cylinders for faster cycle times and reduced fuel consumption.

2 The auto-stop and auto-idle feature on the JCB EcoMAX Tier 4 Final engine enables fuel saving of up to 5%.

3 JCB offers a full range of auxiliary pipework options, including hammer, merged pump flow, auxiliary and low flow.

4 Effective machine cooling in temperatures up to 131°F heat, even with the air conditioning running, is achieved with a 15 percent larger hydraulic cooler for optimum airflow.

5 Larger bucket cylinder for 11 percent better bucket tearout.

1

2

3

4

5

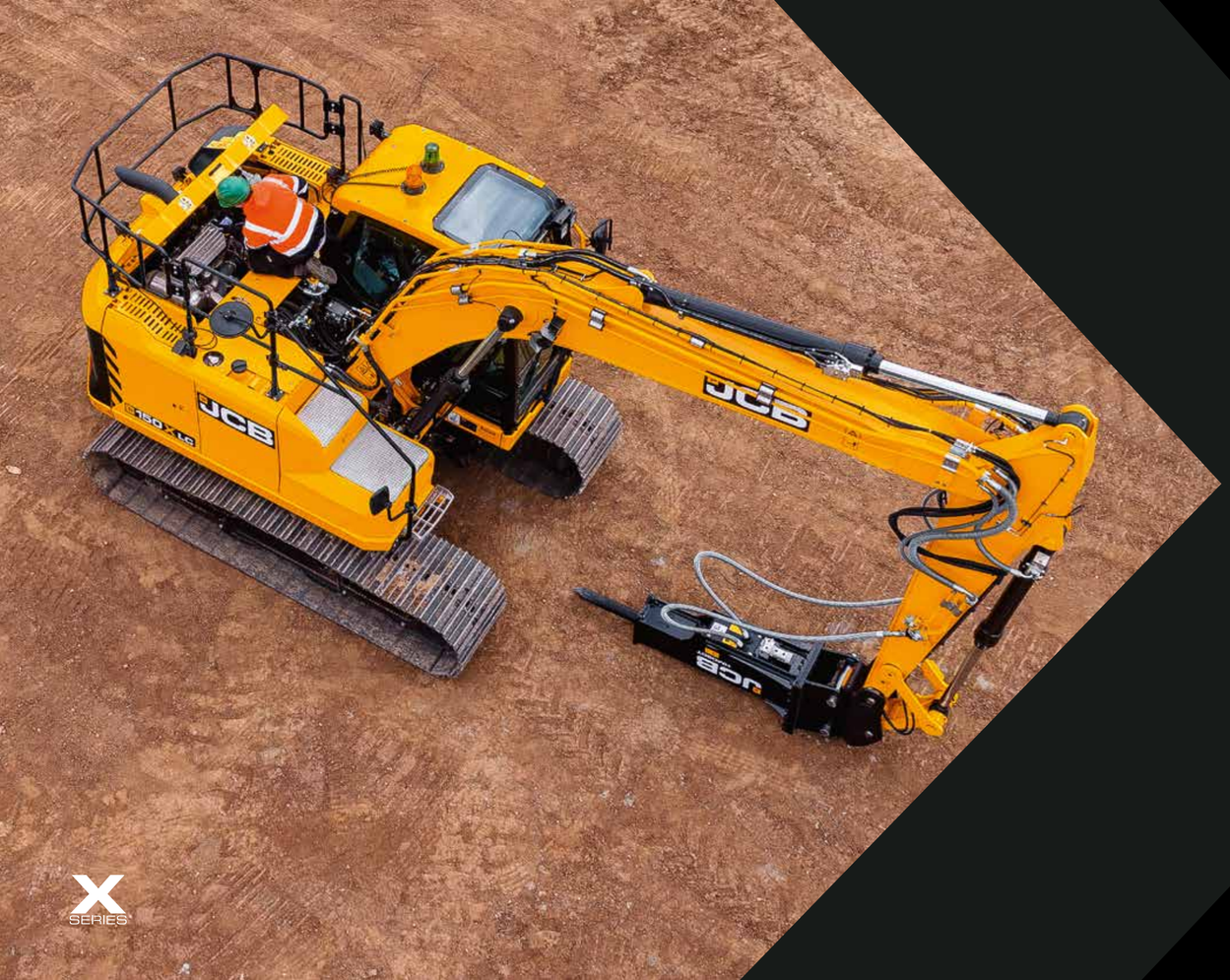

EXTRAORDINARY ATTENTION TO DETAIL

World-class finish.

1 All components are painted in-house at JCB's state-of-the-art paint facility. JCB's paint process includes quality checks for paint adhesion and coverage.

All JCB machines undergo 1,232 validation checks, including vibration, pressure and temperature tests, that replicate real application conditions.

2 Fewer vented and open areas means stronger bodywork and reduced painted edges.

3 Doors are zinc-coated for rust protection on all wear faces and are bolted directly to the frame.

A new bolt and washer design protects paint from damage. All fasteners have a Geomet zinc finish for improved corrosion resistance.

4 New recessed counterweight design protects the rear end from impact damage.

World-class assembly.

5 Robot welding of the dig end and undercarriage ensures consistent quality and accuracy.

6 The slew ring mounting face is machined after manufacturing and welding to ensure a flat surface that reduces slewing noise.

1

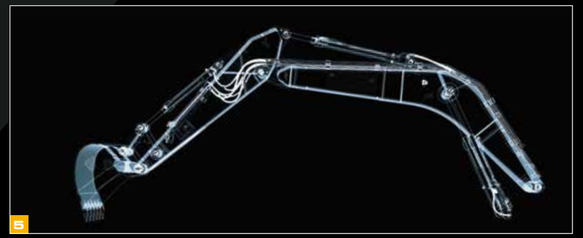
5

2

4

5

3

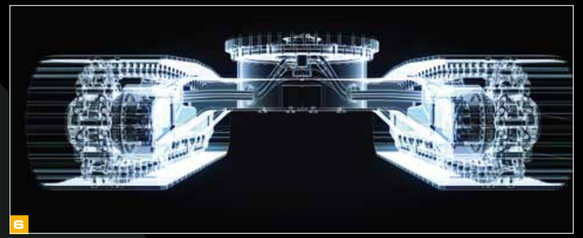
6

EXTENDED SERVICE INTERVALS

Simple servicing.

1 Grouped greasing points so regular maintenance is easier and faster.

2 An optional refueling pump is available, with or without an in-line fuel filter.

3 Ground-level access to the hour meter, HVAC filter, cab air filter and single fuse box.

Optional LED convenience lighting for the service bay and upper structure.

4 Bolt-on handrails and mirrors can be easily replaced if needed.

5 1,000-hour engine air filter life thanks to JCB's standard-fit system with Powercore Nanofilter technology.

6 Large, single-face cooling pack for more efficient cooling and easy access.

1

2

3

4

5

6

EXCEEDINGLY SAFE

Operators, service engineers and site workers benefit from JCB's unique approach to safety, with features designed into the machine to make work safer for everyone.

Safer working.

1 The 150X boasts anti-slip surfaces and comfortable grab handles. To make servicing more comfortable, kneeling areas are free of tread plate.

2 Flat, safe operator access to the top of the machine with built in kick strips around the edges.

3 Optional twin or 360-degree cameras aid safe operation.

4 The optional dipper limiter can be configured to avoid a cab strike.

1

2

3

4

EXTRA SUPPORT

JCB LIVELINK IS AN INNOVATIVE SOFTWARE SYSTEM TO MONITOR AND MANAGE YOUR MACHINES REMOTELY - ONLINE, BY EMAIL OR BY MOBILE PHONE.

LIVE JCB LINK

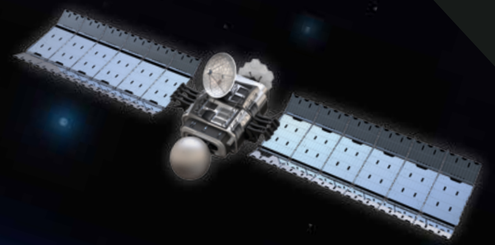

Productivity and cost benefits.

JCB LiveLink helps reduce operating costs by enabling remote access to valuable machine status information, including idle time monitoring and machine fuel consumption. Insurance costs may even be reduced thanks to LiveLink's remote machine location information.

Maintenance benefits.

Manage machine maintenance easily – accurate hours monitoring and service alerts improve maintenance planning. Critical machine alerts and maintenance history records are also available.

Security benefits.

Livelink's real-time geofencing alerts advise when a machine is moved out of a predetermined zone and real-time curfew alerts inform of unauthorized usage. Further benefits include real-time location information, advanced ECU matching (pairs LiveLink with the immobilizer or ECU), and remote PIN code management.

X SERIES

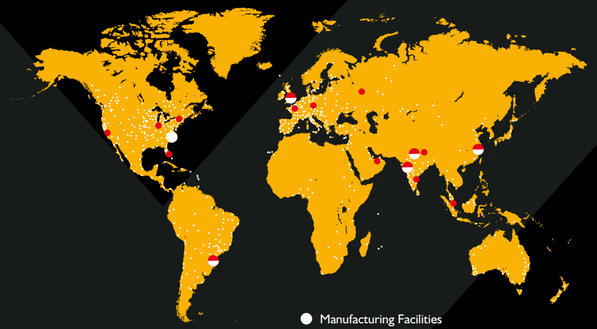

- Manufacturing Facilities
- Dealers
- Parts Distribution Centers

1

1 JCB Technical Support Service provides instant access to factory expertise, day or night. JCB's Finance team is always on hand to provide fast, flexible, competitive quotes.

2 The global network of JCB Parts Centers is a model of efficiency. Four JCB parts distribution centers in North America maintain 95 percent parts availability and 99 percent same-day dispatch. Genuine JCB parts work in perfect harmony with your machine for optimum performance and productivity.

3 JCB Yellow Shield offers comprehensive extended warranties and service agreements, as well as service-only or repair and maintenance contracts. JCB maintenance teams offer competitive labor rates and no-obligation quotes.

Note: JCB LIVELINK and JCB YELLOW SHIELD may not be available in your region. Please check with your local JCB dealer.

2

3

X SERIES

STATIC DIMENSIONS

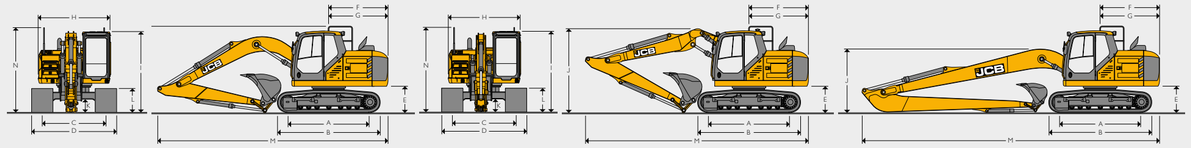

STATIC DIMENSIONS

Model			150X									150X HD		
A	Track length on ground	ft-in (m)	9-5 (2.87)									10-2 (3.09)		
B	Undercarriage overall length	ft-in (m)	11-9 (3.59)									12-11 (3.94)		
C	Track gauge	ft-in (m)	6-6 (1.99)									7-3 (2.20)		
D	Width over tracks (500 mm trackshoes)	ft-in (m)	8-2 (2.49)									-		
D	Width over tracks (600 mm trackshoes)	ft-in (m)	8-6 (2.59)									9-2 (2.80)		
D	Width over tracks (700 mm trackshoes)	ft-in (m)	8-10 (2.69)									9-6 (2.90)		
D	Width over tracks (850 mm trackshoes)	ft-in (m)	9-4 (2.84)									-		
E	Counterweight clearance	ft-in (m)	3-0 (0.91)									3-5 (1.05)		
F	Tail length	ft-in (m)	6-11									6-11 (2.10)		
G	Tailswing radius	ft-in (m)	7-1									7-1 (2.15)		
H	Width of upper structure	ft-in (m)	8-2 (2.49)									8-2 (2.49)		
H	Width of upper structure (with SIPS)	ft-in (m)	8-7 (2.62)									8-7 (2.62)		
I	Height over cab	ft-in (m)	9-5 (2.87)									9-7 (2.92)		
I	Height over cab (vandal guard - optional)	ft-in (m)	10-5 (3.17)									10-11 (3.32)		
I	Height over cab (FOPS guard)	ft-in (m)	9-9 (2.97)									10-3 (3.11)		
J	Height over grab rail	ft-in (m)	9-10 (3.00)									10-4 (3.15)		
K	Ground clearance	ft-in (m)	1-5 (0.43)									1-7 (0.47)		
L	Track height	ft-in (m)	2-8 (0.81)									2-11 (0.88)		
				Mono		LR		T.A.B			Mono		T.A.B	
Dipper lengths			8'2" (2.5 m)	8'10" (2.7 m)	9'10" (3.0 m)	17'4" (5.3 m)	8'2" (2.5 m)	8'10" (2.7 m)	9'10" (3.0 m)	8'2" (2.5 m)	8'10" (2.7 m)	9'10" (3.0 m)	8'2" (2.5 m)	8'10" (2.7 m)	9'10" (3.0 m)
M	Transport length	ft-in (mm)	25-2 (7,659)	25-1 (7,654)	24-11 (7,604)	34-1 (10,390)	25-4 (7,726)	25-11 (7,892)	25-0 (7,628)	25-2 (7,659)	25-1 (7,654)	24-11 (7,604)	25-4 (7,726)	25-11 (7,892)	25-0 (7,628)
N	Transport height	ft-in (mm)	9-10 (3,002)	10-6 (3,209)	10-9 (3,289)	9-10 (3,002)	9-10 (3,002)	9-6 (2,908)	10-7 (3,236)	10-4 (3,149)	11-0 (3,356)	11-7 (3,543)	10-4 (3,149)	11-0 (3,356)	11-7 (3,543)

SPECIFICATION 150X

ENGINE

		150X
Model		JCB EcoMAX 444 TCA EU Stage IV EPA Tier 4 Final Compliant
Type		4-stroke, 4-cylinder in-line, common rail, direct injection, turbocharged and intercooled diesel
Rated power	hp (kW)	109 (81)
Piston displacement	gal (l)	1.16 (4.399)
Air filtration		Dry element with secondary safety element and in cab warning indicator
Starting system	volt	24
Batteries	volt	2 x 12
Alternator	volt	28 – 100 ampere
Max. torque	lb-ft (Nm)	381 (516)
Bore and stroke	in (mm)	4 (103) & 5 (132)

SWING SYSTEM

Swing motor		Axial piston
Swing brake		Hydraulic braking plus automatic spring applied disc type parking brake
Swing torque	lbf (kNm)	26,552 (36)
Swing speed	RPM	13.1
Swing gear		Large diameter, internally toothed fully sealed grease bath lubricated
Dipstick		Remote

TRACK DRIVE

Type		Fully hydrostatic, two speed with autoshift	
Travel motors		Variable swash axial piston type, fully guarded within undercarriage frame	
Final drive		Planetary reduction, bolt-on sprockets	
Service brake		Hydraulic counter balance valve	
Park brake		Disc type, spring applied, automatic hydraulic release	
Gradeability		70% (35 deg) continuous	
Travel speed		150X LC	150X HD
	mph (km/h)	High - 4.1 (6.6)	High - 2.7 (4.3)
	mph (km/h)	Low - 2.4 (3.8)	Low - 1.6 (2.5)
Tractive effort	lbf (kNm)	85,557 (116)	143,087 (194)

HYDRAULIC SYSTEM

Pumps				
Main pumps		2 variable displacement axial piston type		
Max. flow	gpm (l/min)	2 x 34 (2 x 130)		
Servo pump		Gear type		
Servo pump max. flow	gpm (l/min)	7.9 (30)		
Control valve				
A combined four and five spool control valve with auxiliary service spool as standard				
Relief valve settings				
Boom/Arm/Bucket	psi (bar)	4,554 (314)		
With power boost	psi (bar)	4,975 (343)		
Swing circuit	psi (bar)	4,047 (279)		
Travel circuit	psi (bar)	4,975 (343)		
Pilot control	psi (bar)	580 (40)		
Filtration				
In tank	micron	105, suction strainer		
Main return line	micron	10, glass fiber element		
Pilot drain line	micron	10, glass fiber element		
Pilot line	micron	10, glass fiber element		
Hydraulic hammer return	micron	10, reinforced microform element		
Hydraulic cylinders				
		Quantity	Bore	Rod diameter
Boom	in (mm)	2	3.9 (100)	3.0 (75)
Arm	in (mm)	1	4.5 (115)	3.1 (80)
Bucket	in (mm)	1	3.9 (100)	2.8 (70)
TAB	in (mm)	1	5.5 (140)	3.0 (75)

SERVICE CAPACITIES		
Fuel tank	gal (l)	68.7 (260)
Engine coolant	gal (l)	5.2 (19.7)
Engine oil	gal (l)	3.7 (14)
Swing reduction gear	gal (l)	0.5 (2.2)
Track reduction gear (each side)	gal (l)	0.9 (3.5)
Hydraulic system	gal (l)	33.3 (126)
Hydraulic tank	gal (l)	35.1 (133)
DEF fluid	gal (l)	12.6 (47.7)

OPTIONAL BLADE

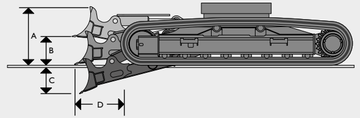

A	Blade height	ft-in (mm)	2-11 (901)
B	Blade lift above ground	ft-in (mm)	1-6 (448)
C	Blade cut below ground	ft-in (mm)	1-8 (508)
D	Blade forward of track	ft-in (mm)	1-4 (412)
	Dozer width – 500 mm tracks	ft-in (mm)	8-2 (2,490)
	Dozer width – 600 mm tracks	ft-in (mm)	8-7 (2,610)
	Dozer width – 700 mm tracks	ft-in (mm)	8-11 (2,710)
Additional machine weight with blade			
	500 mm tracks	(lb) kg	1,777 (806)
	600 mm tracks	(lb) kg	1,795 (814)
	700 mm tracks	(lb) kg	1,810 (821)

SOUND LEVEL		
Sound level in cab according to ISO 6396	dB LpA	67
External sound level according to ISO 6395 and EU Directive 2000/14/EC	dB LwA	102

UNDERCARRIAGE		
Carriage options		LC – Long Carriage, HD – Heavy Duty Carriage.
Construction		Fully welded 'X' frame type with central bellyguarding and sloping sidemembers with dirt relief holes under top rollers.
Recovery point		Front and rear.
Track type		Sealed and lubricated.
Upper and lower rollers		Heat treated, sealed and lubricated.
Track adjustment		Grease cylinder type.
Track idler		Sealed and lubricated, with spring cushioned recoil.
Track shoe options	ft-in (mm)	1-8 (500)
	ft-in (mm)	2-0 (600)
	ft-in (mm)	2-4 (700)
	ft-in (mm)	2-7 (800)
	ft-in (mm)	2-9 (850)
	ft-in (mm)	2-11 (900)
No. of upper rollers (per side)		2
No. of lower rollers (per side)		7
No. of track guides (per side)		2 optional on 150X, 1 standard on 150X HD with 2 optional
No. of track shoes (per side)		44 (43 on HD)

SPECIFICATION 150X

RELIEF VALVE SETTINGS		
Boom/Arm/Bucket	psi (bar)	4,554 (314)
With power boost	psi (bar)	4,975 (343)
Swing circuit	psi (bar)	4,047 (279)
Travel circuit	psi (bar)	4,975 (343)
Pilot control	psi (bar)	580 (40)

HYDRAULIC CYLINDERS				
		Quantity	Bore	Rod diameter
Boom	in (mm)	2	3.9 (100)	3.0 (75)
Arm	in (mm)	1	4.5 (115)	3.1 (80)
Bucket	in (mm)	1	3.9 (100)	2.8 (70)
TAB	in (mm)	1	5.5 (140)	3.0 (75)

WEIGHTS AND GROUND BEARING PRESSURES

Figures include standard 966 lb (483 kg bucket) / 8'2" (2.5 m) dipper

		20" (500 mm) shoes	24" (600 mm) shoes	28" (700 mm) shoes	31" (800 mm) shoes	33" (850 mm) shoes	35" (900 mm) shoes
150X LC Monoboom							
Machine weight	lb (kg)	33,986 (15,416)	34,460 (15,631)	34,937 (15,847)	-	35,649 (16,170)	-
Ground bearing pressure	lb/in² (kg/cm²)	7.0 (0.49)	6.0 (0.42)	5.1 (0.36)	-	4.4 (0.31)	-
150X LC T.A.B							
Machine weight	lb (kg)	34,950 (15,853)	35,424 (16,068)	35,900 (16,284)	-	36,612 (16,607)	-
Ground bearing pressure	lb/in² (kg/cm²)	7.7 (0.54)	6.1 (0.43)	5.3 (0.37)	-	4.4 (0.31)	-
150X HD Monoboom							
Machine weight	lb (kg)	-	37,432 (16,979)	37,953 (17,215)	38,477 (17,453)	-	38,998 (17,689)
Ground bearing pressure	lb/in² (kg/cm²)	-	6.0 (0.42)	5.1 (0.36)	4.6 (0.32)	-	4.1 (0.29)
150X HD T.A.B							
Machine weight	lb (kg)	-	38,396 (17,416)	38,916 (17,652)	39,441 (17,890)	-	39,961 (18,126)
Ground bearing pressure	lb/in² (kg/cm²)	-	6.1 (0.43)	5.3 (0.37)	4.7(0.33)	-	4.3 (0.30)

BUCKET AND ARM COMBINATION									
GP buckets									
Bucket width	in (mm)	18 (450)	24 (600)	28 (700)	31 (800)	35 (900)	39 (1,000)	49 (1,250)	53 (1,350)
Bucket capacity	ft³ (m³)	7.4 (0.21)	12.4 (0.35)	14.8 (0.42)	17.7 (0.50)	19.1 (0.54)	23.3 (0.66)	28.6 (0.81)	31.4 (0.89)
Bucket weight	lb (kg)	677 (307)	754 (342)	807 (366)	884 (401)	937 (425)	1,014 (460)	1,116 (506)	1,195 (542)
HD buckets									
Bucket width	in (mm)	18 (458)	24 (610)	30 (762)	36 (915)	39 (991)	48 (1,219)		
Bucket capacity	ft³ (m³)	7.1 (0.20)	9.2 (0.26)	12.0 (0.34)	15.2 (0.43)	17.7 (0.50)	21.5 (0.61)		
Bucket weight	lb (kg)	606 (275)	683 (310)	787 (357)	886 (402)	935 (424)	1,087 (493)		
Ditch maintenance									
Bucket width	in (mm)	60 (1,524)			72 (1,836)				
Bucket capacity	ft³ (m³)	23.0 (0.65)			27.9 (0.79)				
Bucket weight	lb (kg)	1,047 (475)			1,179 (535)				
HD buckets									
Bucket width	in (mm)	24 (600)	28 (700)	31 (800)	39 (1,000)	47 (1,200)	51 (1,300)		
Bucket capacity	ft³ (m³)	12.4 (0.35)	14.8 (0.42)	17.7 (0.50)	23.3 (0.66)	28.6 (0.81)	31.4 (0.89)		
Bucket weight	lb (kg)	741 (336)	802 (364)	886 (402)	1,003 (455)	1,146 (520)	1,206 (547)		

SPECIFICATION 150X

BUCKET AND ARM COMBINATION																												150X
150X LC																												
6'10" (2.1 m) quick hitch (no quick hitch)	❑ (❑)	❑ (❑)	❑ (❑)	❑ (❑)	❑ (❑)	❑ (❑)	❑ (❑)	❑ (❑)	❑ (❑)	❑ (❑)	❑ (❑)	❑ (❑)	❑ (❑)	❑ (❑)	❑ (❑)	❑ (❑)	❑ (❑)	❑ (❑)	❑ (❑)	❑ (❑)	❑ (❑)	❑ (❑)	❑ (❑)	❑ (❑)	❑ (❑)	❑ (❑)	❑ (❑)	❑ (❑)
8'2" (2.5 m) quick hitch (no quick hitch)	❑ (❑)	❑ (❑)	❑ (❑)	❑ (❑)	❑ (❑)	❑ (❑)	❑ (❑)	❑ (■)	❑ (❑)	❑ (❑)	❑ (❑)	❑ (❑)	❑ (❑)	❑ (❑)	❑ (❑)	❑ (❑)	❑ (❑)	❑ (❑)	❑ (❑)	❑ (❑)	❑ (❑)	❑ (❑)	❑ (❑)	❑ (❑)	❑ (❑)	❑ (■)	❑ (■)
8'10" (2.7 m) quick hitch (no quick hitch)	❑ (❑)	❑ (❑)	❑ (❑)	❑ (❑)	❑ (❑)	❑ (❑)	❑ (■)	■ (■)	❑ (❑)	❑ (❑)	❑ (❑)	❑ (❑)	❑ (❑)	❑ (❑)	❑ (❑)	❑ (❑)	❑ (❑)	❑ (❑)	❑ (❑)	❑ (❑)	❑ (❑)	❑ (❑)	❑ (❑)	❑ (❑)	❑ (❑)	❑ (■)	■ (■)
9'10" (3.0 m) quick hitch (no quick hitch)	❑ (❑)	❑ (❑)	❑ (❑)	❑ (❑)	❑ (❑)	❑ (❑)	❑ (■)	■ (●)	❑ (❑)	❑ (❑)	❑ (❑)	❑ (❑)	❑ (❑)	❑ (❑)	❑ (❑)	❑ (❑)	❑ (❑)	❑ (■)	❑ (❑)	❑ (❑)	❑ (❑)	❑ (❑)	❑ (❑)	❑ (❑)	❑ (■)	■ (●)
150X LCD																												
6'10" (2.1 m) quick hitch (no quick hitch)	❑ (❑)	❑ (❑)	❑ (❑)	❑ (❑)	❑ (❑)	❑ (❑)	❑ (❑)	❑ (❑)	❑ (❑)	❑ (❑)	❑ (❑)	❑ (❑)	❑ (❑)	❑ (❑)	❑ (❑)	❑ (❑)	❑ (❑)	❑ (❑)	❑ (❑)	❑ (❑)	❑ (❑)	❑ (❑)	❑ (❑)	❑ (❑)	❑ (❑)	❑ (❑)	❑ (❑)
8'2" (2.5 m) quick hitch (no quick hitch)	❑ (❑)	❑ (❑)	❑ (❑)	❑ (❑)	❑ (❑)	❑ (❑)	❑ (❑)	❑ (■)	❑ (❑)	❑ (❑)	❑ (❑)	❑ (❑)	❑ (❑)	❑ (❑)	❑ (❑)	❑ (❑)	❑ (❑)	❑ (❑)	❑ (❑)	❑ (❑)	❑ (❑)	❑ (❑)	❑ (❑)	❑ (❑)	❑ (❑)	❑ (■)	❑ (■)
8'10" (2.7 m) quick hitch (no quick hitch)	❑ (❑)	❑ (❑)	❑ (❑)	❑ (❑)	❑ (❑)	❑ (❑)	❑ (❑)	■ (■)	❑ (❑)	❑ (❑)	❑ (❑)	❑ (❑)	❑ (❑)	❑ (❑)	❑ (❑)	❑ (❑)	❑ (❑)	❑ (❑)	❑ (❑)	❑ (❑)	❑ (❑)	❑ (❑)	❑ (❑)	❑ (❑)	❑ (❑)	❑ (■)	❑ (■)
9'10" (3.0 m) quick hitch (no quick hitch)	❑ (❑)	❑ (❑)	❑ (❑)	❑ (❑)	❑ (❑)	❑ (❑)	❑ (■)	■ (●)	❑ (❑)	❑ (❑)	❑ (❑)	❑ (❑)	❑ (❑)	❑ (❑)	❑ (❑)	❑ (❑)	❑ (❑)	❑ (■)	❑ (❑)	❑ (❑)	❑ (❑)	❑ (❑)	❑ (❑)	❑ (❑)	❑ (■)	■ (●)
150X HD																												
8'2" (2.5 m) quick hitch (no quick hitch)	❑ (❑)	❑ (❑)	❑ (❑)	❑ (❑)	❑ (❑)	❑ (❑)	❑ (❑)	❑ (■)	❑ (❑)	❑ (❑)	❑ (❑)	❑ (❑)	❑ (❑)	❑ (❑)	❑ (❑)	❑ (❑)	❑ (❑)	❑ (❑)	❑ (❑)	❑ (❑)	❑ (❑)	❑ (❑)	❑ (❑)	❑ (❑)	❑ (■)	❑ (■)
8'10" (2.7 m) quick hitch (no quick hitch)	❑ (❑)	❑ (❑)	❑ (❑)	❑ (❑)	❑ (❑)	❑ (❑)	❑ (■)	■ (●)	❑ (❑)	❑ (❑)	❑ (❑)	❑ (❑)	❑ (❑)	❑ (❑)	❑ (❑)	❑ (❑)	❑ (❑)	❑ (■)	❑ (❑)	❑ (❑)	❑ (❑)	❑ (❑)	❑ (❑)	❑ (❑)	❑ (■)	■ (●)
150X LC T.A.B.																												
6'10" (2.1 m) quick hitch (no quick hitch)	❑ (❑)	❑ (❑)	❑ (❑)	❑ (❑)	❑ (❑)	❑ (❑)	❑ (■)	■ (■)	❑ (❑)	❑ (❑)	❑ (❑)	❑ (❑)	❑ (❑)	❑ (❑)	❑ (❑)	❑ (❑)	❑ (❑)	❑ (■)	❑ (❑)	❑ (❑)	❑ (❑)	❑ (❑)	❑ (❑)	❑ (❑)	❑ (■)	■ (■)
8'2" (2.5 m) quick hitch (no quick hitch)	❑ (❑)	❑ (❑)	❑ (❑)	❑ (❑)	❑ (❑)	❑ (❑)	■ (■)	■ (●)	❑ (❑)	❑ (❑)	❑ (❑)	❑ (❑)	❑ (❑)	❑ (❑)	❑ (❑)	❑ (❑)	❑ (❑)	■ (■)	❑ (❑)	❑ (❑)	❑ (❑)	❑ (❑)	■ (■)	■ (●)
8'10" (2.7 m) quick hitch (no quick hitch)	❑ (❑)	❑ (❑)	❑ (❑)	❑ (❑)	❑ (❑)	❑ (❑)	■ (●)	● (●)	❑ (❑)	❑ (❑)	❑ (❑)	❑ (❑)	❑ (❑)	❑ (❑)	❑ (❑)	❑ (❑)	❑ (❑)	■ (●)	❑ (❑)	❑ (❑)	❑ (❑)	❑ (❑)	■ (●)	● (●)
9'10" (3.0 m) quick hitch (no quick hitch)	❑ (❑)	❑ (❑)	❑ (❑)	❑ (❑)	❑ (❑)	❑ (■)	■ (●)	● (X)	❑ (❑)	❑ (❑)	❑ (❑)	❑ (❑)	❑ (❑)	❑ (❑)	❑ (■)	❑ (■)	■ (●)	❑ (❑)	❑ (❑)	❑ (❑)	❑ (■)	■ (●)	● (X)
150X LCD T.A.B.																												
6'10" (2.1 m) quick hitch (no quick hitch)	❑ (❑)	❑ (❑)	❑ (❑)	❑ (❑)	❑ (❑)	❑ (❑)	❑ (❑)	❑ (■)	❑ (❑)	❑ (❑)	❑ (❑)	❑ (❑)	❑ (❑)	❑ (❑)	❑ (❑)	❑ (❑)	❑ (❑)	❑ (❑)	❑ (❑)	❑ (❑)	❑ (❑)	❑ (❑)	❑ (❑)	❑ (■)
8'2" (2.5 m) quick hitch (no quick hitch)	❑ (❑)	❑ (❑)	❑ (❑)	❑ (❑)	❑ (❑)	❑ (❑)	❑ (■)	■ (●)	❑ (❑)	❑ (❑)	❑ (❑)	❑ (❑)	❑ (❑)	❑ (❑)	❑ (❑)	❑ (❑)	❑ (❑)	❑ (■)	❑ (❑)	❑ (❑)	❑ (❑)	❑ (❑)	❑ (■)	■ (●)
8'10" (2.7 m) quick hitch (no quick hitch)	❑ (❑)	❑ (❑)	❑ (❑)	❑ (❑)	❑ (❑)	❑ (❑)	■ (■)	■ (●)	❑ (❑)	❑ (❑)	❑ (❑)	❑ (❑)	❑ (❑)	❑ (❑)	❑ (❑)	❑ (❑)	❑ (❑)	❑ (■)	❑ (❑)	❑ (❑)	❑ (❑)	❑ (❑)	■ (■)	■ (●)
9'10" (3.0 m) quick hitch (no quick hitch)	❑ (❑)	❑ (❑)	❑ (❑)	❑ (❑)	❑ (❑)	❑ (❑)	■ (●)	● (●)	❑ (❑)	❑ (❑)	❑ (❑)	❑ (❑)	❑ (❑)	❑ (❑)	❑ (❑)	❑ (❑)	❑ (❑)	■ (●)	❑ (❑)	❑ (❑)	❑ (❑)	❑ (❑)	■ (●)	● (●)
150X HD T.A.B.																												
8'2" (2.5 m) quick hitch (no quick hitch)	❑ (❑)	❑ (❑)	❑ (❑)	❑ (❑)	❑ (❑)	❑ (❑)	❑ (❑)	❑ (■)	❑ (❑)	❑ (❑)	❑ (❑)	❑ (❑)	❑ (❑)	❑ (❑)	❑ (❑)	❑ (❑)	❑ (❑)	❑ (❑)	❑ (❑)	❑ (❑)	❑ (❑)	❑ (❑)	❑ (❑)	❑ (■)
8'10" (2.7 m) quick hitch (no quick hitch)	❑ (❑)	❑ (❑)	❑ (❑)	❑ (❑)	❑ (❑)	❑ (❑)	❑ (■)	■ (■)	❑ (❑)	❑ (❑)	❑ (❑)	❑ (❑)	❑ (❑)	❑ (❑)	❑ (❑)	❑ (❑)	❑ (❑)	❑ (■)	❑ (❑)	❑ (❑)	❑ (❑)	❑ (❑)	❑ (■)	■ (■)

❑ = Suitable for general excavating materials up to 1,800 kg/m³.
■ = Suitable for light excavating materials up to 1,500 kg/m³.
● = Suitable for grading and loading materials up to 1,200 kg/m³.
X = Not recommended.

These recommendations are given as a guide based on typical operating conditions.
Please contact your distributor for the correct selection of buckets and attachments to suit the application.

WORKING RANGE - MONOBOOM 15'5" (4.7 M) - 150X LC						
Dipper length:			6'10" (2.1 m)	8'2" (2.5 m)	8'10" (2.7 m)	9'10" (3.0 m)
A	Max. digging reach	ft-in (mm)	26-4 (8,015)	27-6 (8,385)	28-1 (8,564)	29-0 (8,841)
B	Max. digging reach (on ground)	ft-in (mm)	25-10 (7,863)	27-0 (8,240)	27-8 (8,422)	28-7 (8,704)
C	Max. digging depth	ft-in (mm)	16-11 (5,161)	18-3 (5,564)	18-11 (5,764)	19-11 (6,063)
D	Max. digging height	ft-in (mm)	29-3 (8,907)	30-1 (9,164)	30-6 (9,288)	31-2 (9,503)
E	Max. dumping height	ft-in (mm)	21-0 (6,411)	21-11 (6,684)	22-4 (6,806)	23-0 (7,007)
F	Max. vertical wall cut depth	ft-in (mm)	15-5 (4,698)	16-9 (5,098)	17-4 (5,295)	18-4 (5,592)
G	Min. swing radius	ft-in (mm)	7-1 (2,156)	7-3 (2,212)	8-3 (2,506)	8-5 (2,575)
H	Min. dumping height	ft-in (mm)	9-2 (2,795)	7-10 (2,393)	7-5 (2,267)	6-6 (1,975)
I	Max. swing height	ft-in (mm)	21-1 (6,436)	22-0 (6,707)	22-5 (6,833)	23-1 (7,034)
J	Min. swing height	ft-in (mm)	11-7 (3,525)	10-2 (3,108)	9-7 (2,922)	8-8 (2,630)
	Max. dipper tearout	lbf (kgf)	16,299 (7,393)	14,522 (6,587)	14,209 (6,445)	13,197 (5,986)
	Max. bucket tearout	lbf (kgf)	23,043 (10,452)	23,043 (10,452)	23,043 (10,452)	23,043 (10,452)

WORKING RANGE - MONOBOOM 15'5" (4.7 M) - 150X HD				
Dipper length:			8'2" (2.5 m)	9'10" (3.0 m)
A	Max. digging reach	ft-in (mm)	27-6 (8,385)	29-0 (8,841)
B	Max. digging reach (on ground)	ft-in (mm)	27-0 (8,225)	28-6 (8,689)
C	Max. digging depth	ft-in (mm)	18-0 (5,484)	19-8 (5,983)
D	Max. digging height	ft-in (mm)	30-4 (9,240)	31-4 (9,561)
E	Max. dumping height	ft-in (mm)	22-2 (6,764)	23-3 (7,087)
F	Max. vertical wall cut depth	ft-in (mm)	16-6 (5,018)	18-1 (5,512)
G	Min. swing radius	ft-in (mm)	7-3 (2,212)	8-5 (2,575)
H	Min. dumping height	ft-in (mm)	8-1 (2,473)	6-9 (2,055)
I	Max. swing height	ft-in (mm)	22-3 (6,787)	23-4 (7,114)
J	Min. swing height	ft-in (mm)	10-6 (3,188)	8-11 (2,710)
	Max. dipper tearout	lbf (kgf)	14,522 (6,587)	13,197 (5,986)
	Max. bucket tearout	lbf (kgf)	23,043 (10,452)	23,043 (10,452)

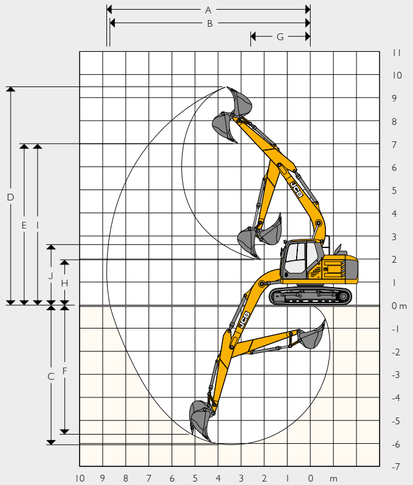

SPECIFICATION 150X

WORKING RANGE - T.A.B 16'5" (5 M) - 150X LC						
Dipper length:			6'10" (2.1 m)	8'2" (2.5 m)	8'10" (2.7 m)	9'10" (3.0 m)
A	Max. digging reach	ft-in (mm)	27-7 (8,410)	28-10 (8,796)	29-6 (8,984)	30-5 (9,271)
B	Max. digging reach (on ground)	ft-in (mm)	27-1 (8,266)	28-5 (8,659)	29-0 (8,849)	30-0 (9,141)
C	Max. digging depth	ft-in (mm)	17-9 (5,417)	19-1 (5,824)	19-9 (6,021)	20-9 (6,319)
D	Max. digging height	ft-in (mm)	30-9 (9,377)	31-9 (9,687)	32-3 (9,832)	33-0 (10,064)
E	Max. dumping height	ft-in (mm)	22-7 (6,881)	23-7 (7,192)	24-1 (7,336)	24-10 (7,568)
F	Max. vertical wall cut depth	ft-in (mm)	15-9 (4,799)	17-1 (5,204)	17-8 (5,395)	18-8 (5,691)
G	Min. swing radius	ft-in (mm)	8-7 (2,616)	9-0 (2,731)	10-0 (3,036)	10-4 (3,149)
H	Min. dumping height	ft-in (mm)	10-5 (3,172)	9-1 (2,778)	8-10 (2,696)	7-11 (2,418)
I	Max. swing height	ft-in (mm)	22-7 (6,879)	23-7 (7,189)	24-1 (7,334)	24-10 (7,566)
J	Min. swing height	ft-in (mm)	12-6 (3,808)	11-2 (3,405)	10-8 (3,262)	9-9 (2,984)
	Max. dipper tearout	lbf (kgf)	16,299 (7,393)	14,522 (6,587)	14,209 (6,445)	13,197 (5,986)
	Max. bucket tearout	lbf (kgf)	23,043(10,452)	23,043 (10,452)	23,043 (10,452)	23,043 (10,452)

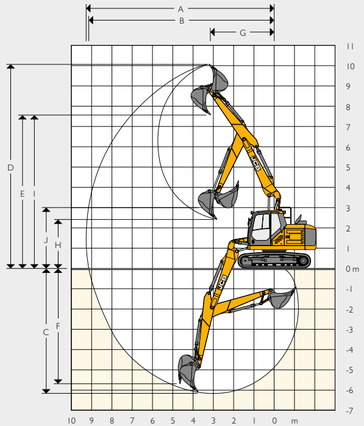

WORKING RANGE - T.A.B 16'5" (5 M) - 150X HD				
Dipper length:			8'2" (2.5 m)	9'10" (3.0 m)
A	Max. digging reach	ft-in (mm)	28-10 (8,796)	30-5 (9,271)
B	Max. digging reach (on ground)	ft-in (mm)	28-4 (8,644)	29-11 (9,127)
C	Max. digging depth	ft-in (mm)	18-4 (5,589)	19-11 (6,080)
D	Max. digging height	ft-in (mm)	32-0 (9,764)	33-3 (10,142)
E	Max. dumping height	ft-in (mm)	23-10 (7,272)	25-1 (7,648)
F	Max. vertical wall cut depth	ft-in (mm)	16-10 (5,124)	18-5 (5,611)
G	Min. swing radius	ft-in (mm)	9-0 (2,731)	10-4 (3,149)
H	Min. dumping height	ft-in (mm)	9-5 (2,858)	8-2 (2,498)
I	Max. swing height	ft-in (mm)	23-10 (7,269)	25-1 (7,646)
J	Min. swing height	ft-in (mm)	11-5 (3,485)	10-1 (3,064)
	Max. dipper tearout	lbf (kgf)	14,522 (6,587)	13,197 (5,986)
	Max. bucket tearout	lbf (kgf)	23,043 (10,452)	23,043 (10,452)

WORKING RANGE - MONOBOOM 24'3" (7.4 M) - 150X LR			
Dipper length:			17'4" (5.3 m)
A	Max. digging reach	ft-in (mm)	42-8 (12,994)
B	Max. digging reach (on ground)	ft-in (mm)	42-4 (12,908)
C	Max. digging depth	ft-in (mm)	32-9 (9,992)
D	Max. digging height	ft-in (mm)	41-5 (12,630)
E	Max. dumping height	ft-in (mm)	35-3 (10,733)
F	Max. vertical wall cut depth	ft-in (mm)	24-4 (7,426)
G	Min. swing radius	ft-in (mm)	9-1 (2,769)
H	Min. dumping height	ft-in (mm)	8-1 (2,455)
I	Max. swing height	ft-in (mm)	35-6 (10,832)
J	Min. swing height	ft-in (mm)	10-2 (3,110)
	Max. dipper tearout	lbf (kgf)	8,430 (3,824)
	Max. bucket tearout	lbf (kgf)	15,512 (7,036)

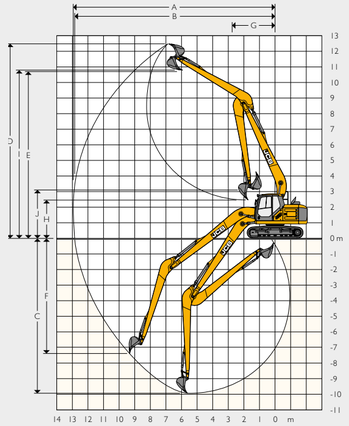

STANDARD/OPTIONAL EQUIPMENT

ENGINE	
JCB, Tier 4 Final-compliant, SCR, water-cooled, diesel, turbocharged, after-cooled, electronic, 4-cylinder, 4.4 liter engine.	•
Start pre-heat	•
DEF tank	•
One touch idle	•
Auto-idle function	•
Automatic engine shutdown	•
Fan guard	•
Heavy-duty batteries	•
Fuel filter with sedimenter	•
Electronic engine control	•
Fuel cooler	•
DEF cooler	•
Refuelling pump with inline filter	+
Additional fuel filter with water separator	•
Reversing fan	+
Webasto winter kit	+
SAFETY	
Side guard rails on upper structure and steps	•
Rear view camera	•
Battery isolator	•
Key	•
Lockable fuel cap	•
Lockable hydraulic tank cap	•
Work lights (2 revolving frame, 2 boom mounted)	•
Roll over protective structure (ROPS)	•
Travel alarm	•
Additional light options (available in halogen or LED)	+
White noise alarm	+
Cab guard	+
Green beacon linked to seat belt	+
Fire extinguisher (1 kg powder)	+
Vandal guards	+
Chevron counterweight	+
Rotating roof beacon	+
2 x counterweight beacons	+
Twin camera	+
360 degree camera	+
Folding handrails	+
Full upper surrounding handrails	+
Arm limiter	+

CAB & INTERIOR	
Sound-insulated and dual-shock mounted cab	•
Mechanical suspension seat	•
Heater	•
Opening front window and removable lower front window	•
Upper door sliding glass in 2 directions	•
Upper windscreen wiper	•
4-button joysticks	•
Travel pedals and T-handle levers	•
2 foot rests	•
Immobilizer	•
Loudspeakers and connection for radio	•
Standard cab filtration	•
Electric dual-tone horn	•
Interior cab light	•
3 x 12v sockets	•
7" color monitor	•
Retractable 2" seatbelt	•
Fixed roof glass	•
Roof blind	•
Cool box	•
Cup holder	•
Climate control	+
Rear window blind	+
3" seat belt	+
2" hi-vis seat belt	+
3" hi-vis seat belt	+
Front blind	+
Side window blind	+
Bluetooth radio (linked to pod controls and screen)	+
Carbon air filter	+
Deluxe seat: heated, adjustable air suspension seat with adjustable headrest.	+
Super deluxe seat: heated and air ventilation, adjustable air suspension seat with adjustable head rest and electric lumbar support	+
Rain guard visor	+
Dual front wiper	+
UNDERCARRIAGE	
Greased and sealed track links	•
Twin track guards	+
24" (600 mm), 28" (700 mm), 31" (800 mm), 33" (850 mm), 35" (900 mm) triple grouser shoe	+
20" (500 mm), 24" (600 mm), 28" (700 mm) dozer	+

HYDRAULIC SYSTEM	
Bucket regeneration	•
One touch power boost	•
Cushion control	•
Cylinder cushioning and contamination seals	•
2-speed track motors	•
Oil cooler	•
10 attachment settings through the display	•
High, merged, medium and low flow options (shut off taps as standard)	+
Advanced tool select to control flow and pressure	+
Proportional control joystick sliders with electronic foot pedal	+
Bio oil	+
Panolin oil	+
Quick hitch pipework	+
Hydraulic quick hitch	+
ISO/SAE change over	+
SAE to BSP converters on high flow auxiliary pipework	+
Quick release couplings	+
Hose burst check valves (boom, arm)	+
Twin HBCV For bucket cylinder	+
Auxiliary vent to tank	+
Attachment case drain	+
Steelwrist ready	+
DIG END	
Grouped greasing	•
Auto greasing	+
Dippers 8'2" (2.5 m), 8'10" (2.7 m), 9'10" (3.0 m)	+
HD dipper 8'2" (2.5 m), 9'10" (3.0 m)	+
Lifting hook tipping link	+
Lifting shackle tipping link	+
Bucket ram guard	+
Triple articulated boom (150X)	+
Guards for boom mounted lights	+
OTHER	
Ground level visible hour meter	•
Large toolbox	•
LiveLink telematics	•
Side impact protection revolving frame	+
Wide core radiators	+
HD slew bearing seal	+
10 mm heavy duty plates for upper and lower structure	+
Flyscreen (cooling pack + condenser)	+
Guards for work lights	+
Service bay & access lighting	+
TOPCON / LIECA / TRIMBLE –GPS ready	+

STANDARD •
OPTIONAL +

SPECIFICATION 150X

LIFT CAPACITIES - DIPPER LENGTH: 6'10" (2.1 M), MONOBOOM: 15'5" (4.7 M), TRACKSHOES: 20" (500 MM), NO BUCKET - 150X LC MONO

Reach ft-in (m)	9-10 (3)		13-1 (4)		16-5 (5)		19-8 (6)		Capacity at Max. Reach		
Load point height ft-in (m)	lb (kg)	lb (kg)	lb (kg)	lb (kg)	lb (kg)	lb (kg)	lb (kg)	lb (kg)	lb (kg)	lb (kg)	ft-in (mm)
19-8 (6)	-	-	7,077 (3,210)	7,077 (3,210)	6,504 (2,950)	6,504 (2,950)	-	-	6,482 (2,940)	6,482 (2,940)	16-5 (5,001)
14-9 (4.5)	8,554 (3,880)	8,554 (3,880)	7,826 (3,550)	7,826 (3,550)	7,430 (3,370)	7,430 (3,370)	6,371 (2,890)	6,371 (2,890)	5,930 (2,690)	5,930(2,690)	19-9 (6,027)
9-10 (3)	13,206 (5,990)	13,206 (5,990)	10,009 (4,540)	10,009 (4,540)	8,532 (3,870)	8,267 (3,750)	7,760 (3,520)	6,327 (2,870)	5,864 (2,660)	5,512 (2,500)	21-6 (6,562)
4-11 (1.5)	-	-	12,456 (5,650)	10,781 (4,890)	9,899 (4,490)	7,915 (3,590)	8,488 (3,850)	6,129 (2,780)	6,151 (2,790)	5,203 (2,360)	22-1 (6,726)
0	14,088 (6,390)	14,088 (6,390)	13,713 (6,220)	10,384 (4,710)	10,781 (4,890)	7,650 (3,470)	8,730 (3,960)	5,997 (2,720)	6,878 (3,120)	5,335 (2,420)	21-6 (6,547)
-4-11 (-1.5)	17,725 (8,040)	15,961 (7,240)	13,536 (6,140)	10,318 (4,680)	10,737 (4,870)	7,584 (3,440)	-	-	8,422 (3,820)	5,997 (2,720)	19-8 (5,994)
-9-10 (-3)	14,969 (6,790)	14,969 (6,790)	11,596 (5,260)	10,494 (4,760)	-	-	-	-	8,730 (3,960)	7,893 (3,580)	16-3 (4,941)

LIFT CAPACITIES - DIPPER LENGTH: 8'2" (2.5 M), MONOBOOM: 15'5" (4.7 M), TRACKSHOES: 20" (500 MM), NO BUCKET - 150X LC MONO

Reach ft-in (m)	9-10 (3)		13-1 (4)		16-5 (5)		19-8 (6)		Capacity at Max. Reach		
Load point height ft-in (m)	lb (kg)	lb (kg)	lb (kg)	lb (kg)	lb (kg)	lb (kg)	lb (kg)	lb (kg)	lb (kg)	lb (kg)	ft-in (mm)
19-8 (6)	-	-	6,129 (2,780)	6,129 (2,780)	6,548 (2,970)	6,548 (2,970)	-	-	5,181 (2,350)	5,181 (2,350)	18-0 (5,491)
14-9 (4.5)	-	-	6,967 (3,160)	6,967 (3,160)	6,768 (3,070)	6,768 (3,070)	6,768 (3,070)	6,526 (2,960)	4,806 (2,180)	4,806 (2,180)	21-1 (6,438)
9-10 (3)	11,640 (5,280)	11,640 (5,280)	9,171 (4,160)	9,171 (4,160)	7,959 (3,610)	7,959 (3,610)	7,297 (3,310)	6,371 (2,890)	4,762 (2,160)	4,762 (2,160)	22-9 (6,942)
4-11 (1.5)	16,689 (7,570)	16,579 (7,520)	11,795 (5,350)	10,869 (4,930)	9,436 (4,280)	7,937 (3,600)	8,135 (3,690)	6,151 (2,790)	5,004 (2,270)	4,806 (2,180)	23-3 (7,096)
0	15,631 (7,090)	15,631 (7,090)	13,448 (6,100)	10,406 (4,720)	10,560 (4,790)	7,650 (3,470)	8,708 (3,950)	5,952 (2,700)	5,556 (2,520)	4,894 (2,220)	22-9 (6,927)
-4-11 (-1.5)	18,188 (8,250)	15,829 (7,180)	13,669 (6,200)	10,251 (4,650)	10,803 (4,900)	7,518 (3,410)	8,642 (3,920)	5,886 (2,670)	6,680 (3,030)	5,423 (2,460)	21-0 (6,407)
-9-10 (-3)	16,028 (7,270)	16,028 (7,270)	12,302 (5,580)	10,340 (4,690)	9,546 (4,330)	7,606 (3,450)	-	-	8,333 (3,780)	6,834 (3,100)	17-10 (5,436)

LIFT CAPACITIES - DIPPER LENGTH: 8'10" (2.7 M), MONOBOOM: 15'5" (4.7 M), TRACKSHOES: 20" (500 MM), NO BUCKET - 150X LC MONO

Reach ft-in (m)	9-10 (3)		13-1 (4)		16-5 (5)		19-8 (6)		Capacity at Max. Reach		
Load point height ft-in (m)	lb (kg)	lb (kg)	lb (kg)	lb (kg)	lb (kg)	lb (kg)	lb (kg)	lb (kg)	lb (kg)	lb (kg)	ft-in (mm)
19-8 (6)	-	-	6,129 (2,780)	6,129 (2,780)	6,548 (2,970)	6,548 (2,970)	-	-	5,181 (2,350)	5,181 (2,350)	18-9 (5,720)
14-9 (4.5)	-	-	6,967 (3,160)	6,967 (3,160)	6,768 (3,070)	6,768 (3,070)	6,768 (3,070)	6,526 (2,960)	4,806 (2,180)	4,806 (2,180)	21-9 (6,635)
9-10 (3)	11,640 (5,280)	11,640 (5,280)	9,171 (4,160)	9,171 (4,160)	7,959 (3,610)	7,959 (3,610)	7,297 (3,310)	6,371 (2,890)	4,762 (2,160)	4,762 (2,160)	23-4 (7,124)
4-11 (1.5)	16,689 (7,570)	16,579 (7,520)	11,795 (5,350)	10,869 (4,930)	9,436 (4,280)	7,937 (3,600)	8,135 (3,690)	6,151 (2,790)	5,004 (2,270)	4,806 (2,180)	23-10 (7,275)
0	15,631 (7,090)	15,631 (7,090)	13,448 (6,100)	10,406 (4,720)	10,560 (4,790)	7,650 (3,470)	8,708 (3,950)	5,952 (2,700)	5,556 (2,520)	4,894 (2,220)	23-4 (7,110)
-4-11 (-1.5)	18,188 (8,250)	15,829 (7,180)	13,669 (6,200)	10,251 (4,650)	10,803 (4,900)	7,518 (3,410)	8,642 (3,920)	5,886 (2,670)	6,680 (3,030)	5,423 (2,460)	21-8 (6,605)
-9-10 (-3)	16,028 (7,270)	16,028 (7,270)	12,302 (5,580)	10,340 (4,690)	9,546 (4,330)	7,606 (3,450)	-	-	8,333 (3,780)	6,834 (3,100)	18-7 (5,668)

Lift capacity front and rear.

Lift capacity full circle.

Notes:
1. Lifting capacities are based on ISO 10567, that is: 75% of minimum tipping load or 87% of hydraulic lift capacity, whichever is the less. Lifting capacities marked* are based on hydraulic capacity.
2. Lift capacities assume that the machine is on firm, level ground.
3. Lift capacities may be limited by local regulations. Please refer to your dealer.

LIFT CAPACITIES - DIPPER LENGTH: 9'10" (3.0 M), MONOBOOM: 15'5" (4.7 M), TRACKSHOES: 20" (500 MM), NO BUCKET - 150X LC MONO

Reach ft-in (m)	9-10 (3)		13-1 (4)		16-5 (5)		19-8 (6)		Capacity at Max. Reach		
Load point height ft-in (m)	lb (kg)	lb (kg)	lb (kg)	lb (kg)	lb (kg)	lb (kg)	lb (kg)	lb (kg)	lb (kg)	lb (kg)	ft-in (mm)
19-8 (6)	-	-	-	-	5,556 (2,520)	5,556 (2,520)	5,269 (2,390)	5,269 (2,390)	4,762 (2,160)	4,762 (2,160)	19-11 (6,072)
14-9 (4.5)	-	-	5,864 (2,660)	5,864 (2,660)	5,930 (2,690)	5,930 (2,690)	5,997 (2,720)	5,997 (2,720)	4,475 (2,030)	4,475 (2,030)	22-9 (6,940)
9-10 (3)	9,656 (4,380)	9,656 (4,380)	8,047 (3,650)	8,047 (3,650)	7,187 (3,260)	7,187 (3,260)	6,680 (3,030)	6,415 (2,910)	4,453 (2,020)	4,453 (2,020)	24-4 (7,409)
4-11 (1.5)	14,991 (6,800)	14,991 (6,800)	10,825 (4,910)	10,825 (4,910)	8,796 (3,990)	7,981 (3,620)	7,628 (3,460)	6,151 (2,790)	4,674 (2,120)	4,365 (1,980)	24-9 (7,554)
0	17,218 (7,810)	15,873 (7,200)	12,875 (5,840)	10,384 (4,710)	10,119 (4,590)	7,606 (3,450)	8,466 (3,840)	5,908 (2,680)	5,137 (2,330)	4,409 (2,000)	24-3 (7,395)
-4-11 (-1.5)	18,365 (8,330)	15,609 (7,080)	13,580 (6,160)	10,119 (4,590)	10,692 (4,850)	7,408 (3,360)	8,532 (3,870)	5,798 (2,630)	6,063 (2,750)	4,806 (2,180)	22-8 (6,911)
-9-10 (-3)	16,909 (7,670)	15,719 (7,130)	12,831 (5,820)	10,141 (4,600)	10,097 (4,580)	7,430 (3,370)	7,826 (3,550)	5,864 (2,660)	7,782 (3,530)	5,842 (2,650)	19-9 (6,023)

LIFT CAPACITIES - DIPPER LENGTH: 6'10" (2.1 M), MONOBOOM: 15'5" (4.7 M), TRACKSHOES: 20" (500 MM), NO BUCKET - 150X LCD MONO

Reach ft-in (m)	9-10 (3)		13-1 (4)		16-5 (5)		19-8 (6)		Capacity at Max. Reach		
Load point height ft-in (m)	lb (kg)	lb (kg)	lb (kg)	lb (kg)	lb (kg)	lb (kg)	lb (kg)	lb (kg)	lb (kg)	lb (kg)	ft-in (mm)
19-8 (6)	-	-	7,077 (3,210)	7,077 (3,210)	6,504 (2,950)	6,504 (2,950)	-	-	6,482 (2,940)	6,482 (2,940)	16-5 (5,001)
14-9 (4.5)	8,554 (3,880)	8,554 (3,880)	7,826 (3,550)	7,826 (3,550)	7,430 (3,370)	7,430 (3,370)	6,371 (2,890)	6,371 (2,890)	5,930 (2,690)	5,930 (2,690)	19-9 (6,027)
9-10 (3)	13,206 (5,990)	13,206 (5,990)	10,009 (4,540)	10,009 (4,540)	8,532 (3,870)	8,532 (3,870)	7,760 (3,520)	6,614 (3,000)	5,864 (2,660)	5,754 (2,610)	21-6 (6,562)
4-11 (1.5)	-	-	12,456 (5,650)	11,244 (5,100)	9,899 (4,490)	8,245 (3,740)	8,488 (3,850)	6,415 (2,910)	6,151 (2,790)	5,445 (2,470)	22-1 (6,726)
0	14,088 (6,390)	14,088 (6,390)	13,713 (6,220)	10,847 (4,920)	10,781 (4,890)	8,003 (3,630)	8,973 (4,070)	6,261 (2,840)	6,878 (3,120)	5,578 (2,530)	21-6 (6,547)
-4-11 (-1.5)	17,725 (8,040)	16,667 (7,560)	13,536 (6,140)	10,781 (4,890)	10,737 (4,870)	7,915 (3,590)	-	-	8,422 (3,820)	6,261 (2,840)	19-8 (5,994)
-9-10 (-3)	14,969 (6,790)	14,969 (6,790)	11,596 (5,260)	10,957 (4,970)	-	-	-	-	8,730 (3,960)	8,245 (3,740)	16-3 (4,941)

LIFT CAPACITIES - DIPPER LENGTH: 8'2" (2.5 M), MONOBOOM: 15'5" (4.7 M), TRACKSHOES: 20" (500 MM), NO BUCKET - 150X LCD MONO

Reach ft-in (m)	9-10 (3)		13-1 (4)		16-5 (5)		19-8 (6)		Capacity at Max. Reach		
Load point height ft-in (m)	lb (kg)	lb (kg)	lb (kg)	lb (kg)	lb (kg)	lb (kg)	lb (kg)	lb (kg)	lb (kg)	lb (kg)	ft-in (mm)
19-8 (6)	-	-	6,129 (2,780)	6,129 (2,780)	6,548 (2,970)	6,548 (2,970)	-	-	5,181 (2,350)	5,181 (2,350)	18-0 (5,491)
14-9 (4.5)	-	-	6,967 (3,160)	6,967 (3,160)	6,768 (3,070)	6,768 (3,070)	6,768 (3,070)	6,768 (3,070)	4,806 (2,180)	4,806 (2,180)	21-1 (6,438)
9-10 (3)	11,640 (5,280)	11,640 (5,280)	9,171 (4,160)	9,171 (4,160)	7,959 (3,610)	7,959 (3,610)	7,297 (3,310)	6,636 (3,010)	4,762 (2,160)	4,762 (2,160)	22-9 (6,942)
4-11 (1.5)	16,689 (7,570)	16,689 (7,570)	11,795 (5,350)	11,332 (5,140)	9,436 (4,280)	8,289 (3,760)	8,135 (3,690)	6,415 (2,910)	5,004 (2,270)	5,004 (2,270)	23-3 (7,096)
0	15,631 (7,090)	15,631 (7,090)	13,448 (6,100)	10,869 (4,930)	10,560 (4,790)	7,981 (3,620)	8,796 (3,990)	6,239 (2,830)	5,556 (2,520)	5,137 (2,330)	22-9 (6,927)
-4-11 (-1.5)	18,188 (8,250)	16,535 (7,500)	13,669 (6,200)	10,714 (4,860)	10,803 (4,900)	7,848 (3,560)	8,774 (3,980)	6,173 (2,800)	6,680 (3,030)	5,666 (2,570)	21-0 (6,407)
-9-10 (-3)	16,028 (7,270)	16,028 (7,270)	12,302 (5,580)	10,803 (4,900)	9,546 (4,330)	7,959 (3,610)	-	-	8,333 (3,780)	7,143 (3,240)	17-10 (5,436)

Lift capacity front and rear.

Lift capacity full circle.

Notes:
1. Lifting capacities are based on ISO 10567, that is: 75% of minimum tipping load or 87% of hydraulic lift capacity, whichever is the less. Lifting capacities marked* are based on hydraulic capacity.
2. Lift capacities assume that the machine is on firm, level ground.
3. Lift capacities may be limited by local regulations. Please refer to your dealer.

SPECIFICATION 150X

LIFT CAPACITIES - DIPPER LENGTH: 8'10" (2.7 M), MONOBOOM: 15'5" (4.7 M), TRACKSHOES: 20" (500 MM), NO BUCKET - 150X LCD MONO

Reach ft-in (m)	9-10 (3)		13-1 (4)		16-5 (5)		19-8 (6)		Capacity at Max. Reach		
Load point height ft-in (m)	lb (kg)	lb (kg)	lb (kg)	lb (kg)	lb (kg)	lb (kg)	lb (kg)	lb (kg)	lb (kg)	lb (kg)	ft-in (mm)
19-8 (6)	-	-	5,666 (2,570)	5,666 (2,570)	6,129 (2,780)	6,129 (2,780)	-	-	5,445 (2,470)	5,445 (2,470)	18-9 (5,721)
14-9 (4.5)	-	-	6,526 (2,960)	6,526 (2,960)	6,437 (2,920)	6,437 (2,920)	6,437 (2,920)	6,437 (2,920)	5,071 (2,300)	5,071 (2,300)	21-9 (6,635)
9-10 (3)	10,825 (4,910)	10,825 (4,910)	8,708 (3,950)	8,708 (3,950)	7,650 (3,470)	7,650 (3,470)	7,033 (3,190)	6,658 (3,020)	5,049 (2,290)	5,049 (2,290)	23-4 (7,124)
4-11 (1.5)	15,984 (7,250)	15,984 (7,250)	11,398 (5,170)	11,354 (5,150)	9,171 (4,160)	8,289 (3,760)	7,937 (3,600)	6,415 (2,910)	5,313 (2,410)	4,850 (2,200)	23-10 (7,275)
0	16,072 (7,290)	16,072 (7,290)	13,206 (5,990)	10,825 (4,910)	10,362 (4,700)	7,959 (3,610)	8,664 (3,930)	6,195 (2,810)	5,864 (2,660)	4,916 (2,230)	23-4 (7,110)
-4-11 (-1.5)	18,276 (8,290)	16,402 (7,440)	13,625 (6,180)	10,626 (4,820)	10,759 (4,880)	7,804 (3,540)	8,796 (3,990)	6,107 (2,770)	6,989 (3,170)	5,401 (2,450)	21-8 (6,605)
-9-10 (-3)	16,380 (7,430)	16,380 (7,430)	12,522 (5,680)	10,692 (4,850)	9,811 (4,450)	7,848 (3,560)	-	-	8,113 (3,680)	6,702 (3,040)	18-7 (5,668)

LIFT CAPACITIES - DIPPER LENGTH: 9'10" (3.0 M), MONOBOOM: 15'5" (4.7 M), TRACKSHOES: 20" (500 MM), NO BUCKET - 150X LCD MONO

Reach ft-in (m)	9-10 (3)		13-1 (4)		16-5 (5)		19-8 (6)		Capacity at Max. Reach		
Load point height ft-in (m)	lb (kg)	lb (kg)	lb (kg)	lb (kg)	lb (kg)	lb (kg)	lb (kg)	lb (kg)	lb (kg)	lb (kg)	ft-in (mm)
19-8 (6)	-	-	-	-	5,556 (2,520)	5,556 (2,520)	5,269 (2,390)	5,269 (2,390)	4,762 (2,160)	4,762 (2,160)	19-11 (6,072)
14-9 (4.5)	-	-	5,864 (2,660)	5,864 (2,660)	5,930 (2,690)	5,930 (2,690)	5,997 (2,720)	5,997 (2,720)	4,475 (2,030)	4,475 (2,030)	22-9 (6,940)
9-10 (3)	9,656 (4,380)	9,656 (4,380)	8,047 (3,650)	8,047 (3,650)	7,187 (3,260)	7,187 (3,260)	6,680 (3,030)	6,680 (3,030)	4,453 (2,020)	4,453 (2,020)	24-4 (7,409)
4-11 (1.5)	14,991 (6,800)	14,991 (6,800)	10,825 (4,910)	10,825 (4,910)	8,796 (3,990)	8,333 (3,780)	7,628 (3,460)	6,415 (2,910)	4,674 (2,120)	4,564 (2,070)	24-9 (7,554)
0	17,218 (7,810)	16,579 (7,520)	12,875 (5,840)	10,847 (4,920)	10,119 (4,590)	7,959 (3,610)	8,466 (3,840)	6,195 (2,810)	5,137 (2,330)	4,630 (2,100)	24-3 (7,395)
-4-11 (-1.5)	18,365 (8,330)	16,314 (7,400)	13,580 (6,160)	10,582 (4,800)	10,692 (4,850)	7,760 (3,520)	8,774 (3,980)	6,063 (2,750)	6,063 (2,750)	5,049 (2,290)	22-8 (6,911)
-9-10 (-3)	16,909 (7,670)	16,424 (7,450)	12,831 (5,820)	10,604 (4,810)	10,097 (4,580)	7,760 (3,520)	7,826 (3,550)	6,129 (2,780)	7,782 (3,530)	6,107 (2,770)	19-9 (6,023)

LIFT CAPACITIES - DIPPER LENGTH: 6'10" (2.1 M), MONOBOOM: 15'5" (4.7 M), TRACKSHOES: 20" (500 MM), NO BUCKET - 150X HD MONO

Reach ft-in (m)	9-10 (3)		13-1 (4)		16-5 (5)		19-8 (6)		Capacity at Max. Reach		
Load point height ft-in (m)	lb (kg)	lb (kg)	lb (kg)	lb (kg)	lb (kg)	lb (kg)	lb (kg)	lb (kg)	lb (kg)	lb (kg)	ft-in (mm)
19-8 (6)	-	-	7,077 (3,210)	7,077 (3,210)	6,504 (2,950)	6,504 (2,950)	-	-	6,482 (2,940)	6,482 (2,940)	19-5 (5,001)
14-9 (4.5)	8,554 (3,880)	8,554 (3,880)	7,826 (3,550)	7,826 (3,550)	7,430 (3,370)	7,430 (3,370)	6,371 (2,890)	6,371 (2,890)	5,930 (2,690)	5,930 (2,690)	19-9 (6,027)
9-10 (3)	13,206 (5,990)	13,206 (5,990)	10,009 (4,540)	10,009 (4,540)	8,532 (3,870)	8,532 (3,870)	7,760 (3,520)	7,716 (3,500)	5,864 (2,660)	5,864 (2,660)	21-6 (6,562)
4-11 (1.5)	-	-	12,456 (5,650)	12,456 (5,650)	9,899 (4,490)	9,722 (4,410)	8,488 (3,850)	7,518 (3,410)	6,151 (2,790)	6,151 (2,790)	22-1 (6,726)
0	14,088 (6,390)	14,088 (6,390)	13,713 (6,220)	12,941 (5,870)	10,781 (4,890)	9,458 (4,290)	8,973 (4,070)	7,363 (3,340)	6,878 (3,120)	6,570 (2,980)	21-6 (6,547)
-4-11 (-1.5)	17,725 (8,040)	17,725 (8,040)	13,536 (6,140)	12,875 (5,840)	10,737 (4,870)	9,370 (4,250)	-	-	8,422 (3,820)	7,385 (3,350)	19-8 (5,994)
-9-10 (-3)	14,969 (6,790)	14,969 (6,790)	11,596 (5,260)	11,596 (5,260)	-	-	-	-	8,730 (3,960)	8,730 (3,960)	16-3 (4,941)

Lift capacity front and rear.

Lift capacity full circle.

Notes:
1. Lifting capacities are based on ISO 10567, that is: 75% of minimum tipping load or 87% of hydraulic lift capacity, whichever is the less. Lifting capacities marked* are based on hydraulic capacity.
2. Lift capacities assume that the machine is on firm, level ground.
3. Lift capacities may be limited by local regulations. Please refer to your dealer.

LIFT CAPACITIES - DIPPER LENGTH: 8'2" (2.5 M), MONOBOOM: 15'5" (4.7 M), TRACKSHOES: 20" (500 MM), NO BUCKET - 150X HD MONO

Reach ft-in (m)	9-10 (3)		13-1 (4)		16-5 (5)		19-8 (6)		Capacity at Max. Reach		
Load point height ft-in (m)	lb (kg)	lb (kg)	lb (kg)	lb (kg)	lb (kg)	lb (kg)	lb (kg)	lb (kg)	lb (kg)	lb (kg)	ft-in (mm)
19-8 (6)	-	-	6,129 (2,780)	6,129 (2,780)	6,548 (2,970)	6,548 (2,970)	-	-	5,181 (2,350)	5,181 (2,350)	18-0 (5,491)
14-9 (4.5)	-	-	6,967 (3,160)	6,967 (3,160)	6,768 (3,070)	6,768 (3,070)	6,768 (3,070)	6,768 (3,070)	4,806 (2,180)	4,806 (2,180)	21-1 (6,438)
9-10 (3)	11,640 (5,280)	11,640 (5,280)	9,171 (4,160)	9,171 (4,160)	7,959 (3,610)	7,959 (3,610)	7,297 (3,310)	7,297 (3,310)	4,762 (2,160)	4,762 (2,160)	22-9 (6,942)
4-11 (1.5)	16,689 (7,570)	16,689 (7,570)	11,795 (5,350)	11,795 (5,350)	9,436 (4,280)	9,436 (4,280)	8,135 (3,690)	7,540 (3,420)	5,004 (2,270)	5,004 (2,270)	23-3 (7,096)
0	15,631 (7,090)	15,631 (7,090)	13,448 (6,100)	12,963 (5,880)	10,560 (4,790)	9,436 (4,280)	8,796 (3,990)	7,341 (3,330)	5,556 (2,520)	5,556 (2,520)	22-9 (6,927)
-4-11 (-1.5)	18,188 (8,250)	18,188 (8,250)	13,669 (6,200)	12,787 (5,800)	10,803 (4,900)	9,304 (4,220)	8,774 (3,980)	7,275 (3,300)	6,680 (3,030)	6,680 (3,030)	21-0 (6,407)
-9-10 (-3)	16,028 (7,270)	16,028 (7,270)	12,302 (5,580)	12,302 (5,580)	9,546 (4,330)	9,414 (4,270)	-	-	8,333 (3,780)	8,333 (3,780)	17-10 (5,436)

LIFT CAPACITIES - DIPPER LENGTH: 8'10" (2.7 M), MONOBOOM: 15'5" (4.7 M), TRACKSHOES: 20" (500 MM), NO BUCKET - 150X HD MONO

Reach ft-in (m)	9-10 (3)		13-1 (4)		16-5 (5)		19-8 (6)		Capacity at Max. Reach		
Load point height ft-in (m)	lb (kg)	lb (kg)	lb (kg)	lb (kg)	lb (kg)	lb (kg)	lb (kg)	lb (kg)	lb (kg)	lb (kg)	ft-in (mm)
19-8 (6)	-	-	5,666 (2,570)	5,666 (2,570)	6,129 (2,780)	6,129 (2,780)	-	-	5,445 (2,470)	5,445 (2,470)	18-9 (5,721)
14-9 (4.5)	-	-	6,526 (2,960)	6,526 (2,960)	6,437 (2,920)	6,437 (2,920)	6,437 (2,920)	6,437 (2,920)	5,071 (2,300)	5,071 (2,300)	21-9 (6,635)
9-10 (3)	10,825 (4,910)	10,825 (4,910)	8,708 (3,950)	8,708 (3,950)	7,650 (3,470)	7,650 (3,470)	7,033 (3,190)	7,033 (3,190)	5,049 (2,290)	5,049 (2,290)	23-4 (7,124)
4-11 (1.5)	15,984 (7,250)	15,984 (7,250)	11,398 (5,170)	11,398 (5,170)	9,171 (4,160)	9,171 (4,160)	7,937 (3,600)	7,518 (3,410)	5,313 (2,410)	5,313 (2,410)	23-10 (7,275)
0	16,072 (7,290)	16,072 (7,290)	13,206 (5,990)	12,919 (5,860)	10,362 (4,700)	9,414 (4,270)	8,664 (3,930)	7,319 (3,320)	5,864 (2,660)	5,798 (2,630)	23-4 (7,110)
-4-11 (-1.5)	18,276 (8,290)	18,276 (8,290)	13,625 (6,180)	12,721 (5,770)	10,759 (4,880)	9,259 (4,200)	8,796 (3,990)	7,231 (3,280)	6,989 (3,170)	6,371 (2,890)	21-8 (6,605)
-9-10 (-3)	16,380 (7,430)	16,380 (7,430)	12,522 (5,680)	12,522 (5,680)	9,811 (4,450)	9,304 (4,220)	-	-	8,113 (3,680)	7,893 (3,580)	18-7 (5,668)

LIFT CAPACITIES - DIPPER LENGTH: 9'10" (3.0 M), MONOBOOM: 15'5" (4.7 M), TRACKSHOES: 20" (500 MM), NO BUCKET - 150X HD MONO

Reach ft-in (m)	9-10 (3)		13-1 (4)		16-5 (5)		19-8 (6)		Capacity at Max. Reach		
Load point height ft-in (m)	lb (kg)	lb (kg)	lb (kg)	lb (kg)	lb (kg)	lb (kg)	lb (kg)	lb (kg)	lb (kg)	lb (kg)	ft-in (mm)
19-8 (6)	-	-	-	-	5,556 (2,520)	5,556 (2,520)	5,269 (2,390)	5,269 (2,390)	4,762 (2,160)	4,762 (2,160)	19-11 (6,072)
14-9 (4.5)	-	-	5,864 (2,660)	5,864 (2,660)	5,930 (2,690)	5,930 (2,690)	5,997 (2,720)	5,997 (2,720)	4,475 (2,030)	4,475 (2,030)	22-9 (6,940)
9-10 (3)	9,656 (4,380)	9,656 (4,380)	8,047 (3,650)	8,047 (3,650)	7,187 (3,260)	7,187 (3,260)	6,680 (3,030)	6,680 (3,030)	4,453 (2,020)	4,453 (2,020)	24-4 (7,409)
4-11 (1.5)	14,991 (6,800)	14,991 (6,800)	10,825 (4,910)	10,825 (4,910)	8,796 (3,990)	8,796 (3,990)	7,628 (3,460)	7,540 (3,420)	4,674 (2,120)	4,674 (2,120)	24-9 (7,554)
0	17,218 (7,810)	17,218 (7,810)	12,875 (5,840)	12,875 (5,840)	10,119 (4,590)	9,414 (4,270)	8,466 (3,840)	7,297 (3,310)	5,137 (2,330)	5,137 (2,330)	24-3 (7,395)
-4-11 (-1.5)	18,365 (8,330)	18,365 (8,330)	13,580 (6,160)	12,655 (5,740)	10,692 (4,850)	9,215 (4,180)	8,774 (3,980)	7,187 (3,260)	6,063 (2,750)	5,952 (2,700)	22-8 (6,911)
-9-10 (-3)	16,909 (7,670)	16,909 (7,670)	12,831 (5,820)	12,699 (5,760)	10,097 (4,580)	9,215 (4,180)	7,826 (3,550)	7,253 (3,290)	7,782 (3,530)	7,209 (3,270)	19-9 (6,023)

Lift capacity front and rear.

Lift capacity full circle.

Notes:
1. Lifting capacities are based on ISO 10567, that is: 75% of minimum tipping load or 87% of hydraulic lift capacity, whichever is the less. Lifting capacities marked* are based on hydraulic capacity.
2. Lift capacities assume that the machine is on firm, level ground.
3. Lift capacities may be limited by local regulations. Please refer to your dealer.

SPECIFICATION 150X

LIFT CAPACITIES - DIPPER LENGTH: 6'10" (2.1 M), T.A.B: 16'5" (5 M), TRACKSHOES: 20" (500 MM), NO BUCKET - 150X LC T.A.B.

Reach ft-in (m)	9-10 (3)		13-1 (4)		16-5 (5)		19-8 (6)		Capacity at Max. Reach		
Load point height ft-in (m)	lb (kg)	lb (kg)	lb (kg)	lb (kg)	lb (kg)	lb (kg)	lb (kg)	lb (kg)	lb (kg)	lb (kg)	ft-in (mm)
19-8 (6)	-	-	6,989 (3,170)	6,989 (3,170)	6,967 (3,160)	6,967 (3,160)	-	-	6,923 (3,140)	6,923 (3,140)	18-1 (5,505)
14-9 (4.5)	9,237 (4,190)	9,237 (4,190)	7,959 (3,610)	7,959 (3,610)	7,253 (3,290)	7,253 (3,290)	6,923 (3,140)	6,393 (2,900)	6,261 (2,840)	5,622 (2,550)	21-2 (6,450)
9-10 (3)	-	-	10,097 (4,580)	10,097 (4,580)	8,356 (3,790)	8,113 (3,680)	7,430 (3,370)	6,195 (2,810)	6,085 (2,760)	4,916 (2,230)	22-10 (6,952)
4-11 (1.5)	-	-	12,280 (5,570)	10,384 (4,710)	9,612 (4,360)	7,650 (3,470)	8,113 (3,680)	5,952 (2,700)	6,217 (2,820)	4,652 (2,110)	23-4 (7,107)
0	-	-	13,228 (6,000)	9,987 (4,530)	10,384 (4,710)	7,363 (3,340)	8,554 (3,880)	5,754 (2,610)	6,702 (3,040)	4,740 (2,150)	22-9 (6,938)
-4-11 (-1.5)	16,623 (7,540)	15,432 (7,000)	12,919 (5,860)	9,921 (4,500)	10,296 (4,670)	7,275 (3,300)	8,356 (3,790)	5,732 (2,600)	7,474 (3,390)	5,291 (2,400)	21-1 (6,419)
-9-10 (-3)	-	-	11,155 (5,060)	10,119 (4,590)	8,708 (3,950)	7,452 (3,380)	-	-	7,937 (3,600)	6,945 (3,150)	17-4 (5,290)

LIFT CAPACITIES - DIPPER LENGTH: 8'2" (2.5 M), MONOBOOM: 16'5" (5 M), TRACKSHOES: 20" (500 MM), NO BUCKET - 150X LC T.A.B.

Reach ft-in (m)	9-10 (3)		13-1 (4)		16-5 (5)		19-8 (6)		Capacity at Max. Reach		
Load point height ft-in (m)	lb (kg)	lb (kg)	lb (kg)	lb (kg)	lb (kg)	lb (kg)	lb (kg)	lb (kg)	lb (kg)	lb (kg)	ft-in (mm)
19-8 (6)	-	-	6,195 (2,810)	6,195 (2,810)	6,261 (2,840)	6,261 (2,840)	-	-	5,534 (2,510)	5,534 (2,510)	19-8 (5,994)
14-9 (4.5)	-	-	7,209 (3,270)	7,209 (3,270)	6,702 (3,040)	6,702 (3,040)	6,415 (2,910)	6,415 (2,910)	5,071 (2,300)	5,071 (2,300)	22-7 (6,871)
9-10 (3)	-	-	9,348 (4,240)	9,348 (4,240)	7,871 (3,570)	7,871 (3,570)	7,033 (3,190)	6,239 (2,830)	4,938 (2,240)	4,519 (2,050)	24-1 (7,345)
4-11 (1.5)	-	-	11,707 (5,310)	10,516 (4,770)	9,215 (4,180)	7,694 (3,490)	7,826 (3,550)	5,952 (2,700)	5,071 (2,300)	4,299 (1,950)	24-7 (7,491)
0	-	-	13,007 (5,900)	9,590 (4,350)	10,163 (4,610)	7,341 (3,330)	8,422 (3,820)	5,732 (2,600)	5,445 (2,470)	4,365 (1,980)	24-1 (7,331)
-4-11 (-1.5)	16,336 (7,410)	15,256 (6,920)	13,051 (5,920)	9,855 (4,470)	10,340 (4,690)	7,209 (3,270)	8,444 (3,830)	5,644 (2,560)	6,239 (2,830)	4,784 (2,170)	22-5 (6,842)
-9-10 (-3)	15,102 (6,850)	15,102 (6,850)	11,773 (5,340)	9,987 (4,530)	9,326 (4,230)	7,297 (3,310)	-	-	7,033 (3,190)	5,886 (2,670)	19-6 (5,943)

LIFT CAPACITIES - DIPPER LENGTH: 8'10" (2.7 M), MONOBOOM: 16'5" (5 M), TRACKSHOES: 20" (500 MM), NO BUCKET - 150X LC T.A.B.

Reach ft-in (m)	9-10 (3)		13-1 (4)		16-5 (5)		19-8 (6)		Capacity at Max. Reach		
Load point height ft-in (m)	lb (kg)	lb (kg)	lb (kg)	lb (kg)	lb (kg)	lb (kg)	lb (kg)	lb (kg)	lb (kg)	lb (kg)	ft-in (mm)
19-8 (6)	-	-	-	-	5,930 (2,690)	5,930 (2,690)	6,173 (2,800)	6,173 (2,800)	5,754 (2,610)	5,754 (2,610)	20-5 (6,228)
14-9 (4.5)	-	-	6,812 (3,090)	6,812 (3,090)	6,393 (2,900)	6,393 (2,900)	6,151 (2,790)	6,151 (2,790)	5,313 (2,410)	4,894 (2,220)	23-3 (7,076)
9-10 (3)	-	-	8,929 (4,050)	8,929 (4,050)	7,584 (3,440)	7,584 (3,440)	6,790 (3,080)	6,261 (2,840)	5,203 (2,360)	4,321 (1,960)	24-9 (7,536)
4-11 (1.5)	-	-	11,332 (5,140)	10,538 (4,780)	8,973 (4,070)	7,716 (3,500)	7,628 (3,460)	5,952 (2,700)	5,335 (2,420)	4,123 (1,870)	25-2 (7,679)
0	-	-	12,809 (5,810)	9,943 (4,510)	10,009 (4,540)	7,319 (3,320)	8,289 (3,760)	5,710 (2,590)	5,710 (2,590)	4,167 (1,890)	24-8 (7,523)
-4-11 (-1.5)	15,741 (7,140)	15,102 (6,850)	13,029 (5,910)	9,766 (4,430)	10,296 (4,670)	7,143 (3,240)	8,378 (3,800)	5,600 (2,540)	6,504 (2,950)	4,564 (2,070)	23-1 (7,048)
-9-10 (-3)	15,454 (7,010)	15,366 (6,970)	11,949 (5,420)	9,855 (4,470)	9,480 (4,300)	7,209 (3,270)	7,363 (3,340)	5,710 (2,590)	6,856 (3,110)	5,534 (2,510)	20-3 (6,179)

Lift capacity front and rear.

Lift capacity full circle.

Notes:
1. Lifting capacities are based on ISO 10567, that is: 75% of minimum tipping load or 87% of hydraulic lift capacity, whichever is the less. Lifting capacities marked* are based on hydraulic capacity.
2. Lift capacities assume that the machine is on firm, level ground.
3. Lift capacities may be limited by local regulations. Please refer to your dealer.

LIFT CAPACITIES - DIPPER LENGTH: 9'10" (3.0 M), MONOBOOM: 16'5" (5 M), TRACKSHOES: 20" (500 MM), NO BUCKET - 150X LC T.A.B.

Reach ft-in (m)	9-10 (3)		13-1 (4)		16-5 (5)		19-8 (6)		Capacity at Max. Reach		
Load point height ft-in (m)	lb (kg)	lb (kg)	lb (kg)	lb (kg)	lb (kg)	lb (kg)	lb (kg)	lb (kg)	lb (kg)	lb (kg)	ft-in (mm)
19-8 (6)	-	-	-	-	5,445 (2,470)	5,445 (2,470)	5,666 (2,570)	5,666 (2,570)	5,027 (2,280)	5,027 (2,280)	21-7 (6,580)
14-9 (4.5)	-	-	6,239 (2,830)	6,239 (2,830)	5,975 (2,710)	5,975 (2,710)	5,798 (2,630)	5,798 (2,630)	4,674 (2,120)	4,564 (2,070)	24-3 (7,388)
9-10 (3)	-	-	8,333 (3,780)	8,333 (3,780)	7,165 (3,250)	7,165 (3,250)	6,482 (2,940)	6,305 (2,860)	4,564 (2,070)	4,079 (1,850)	25-8 (7,830)
4-11 (1.5)	-	-	10,825 (4,910)	10,648 (4,830)	8,620 (3,910)	7,760 (3,520)	7,363 (3,340)	5,975 (2,710)	4,696 (2,130)	3,880 (1,760)	26-2 (7,967)
0	-	-	12,522 (5,680)	9,965 (4,520)	9,789 (4,440)	7,319 (3,320)	8,113 (3,680)	5,688 (2,580)	5,027 (2,280)	3,924 (1,780)	25-8 (7,817)
-4-11 (-1.5)	15,212 (6,900)	14,991 (6,800)	13,007 (5,900)	9,700 (4,400)	10,229 (4,640)	7,099 (3,220)	8,333 (3,780)	5,556 (2,520)	5,666 (2,570)	4,255 (1,930)	24-2 (7,361)
-9-10 (-3)	15,961 (7,240)	15,168 (6,880)	12,236 (5,550)	9,744 (4,420)	9,700 (4,400)	7,121 (3,230)	7,760 (3,520)	5,600 (2,540)	6,592 (2,990)	5,049 (2,290)	21-5 (6,535)

Lift Capacities - Dipper Length: 6'10" (2.1 M), T.A.B.: 15'5" (4.7 M), Trackshoes: 20" (500 MM), No Bucket - 150X LCD T.A.B.

Reach ft-in (m)	9-10 (3)		13-1 (4)		16-5 (5)		19-8 (6)		Capacity at Max. Reach		
Load point height ft-in (m)	lb (kg)	lb (kg)	lb (kg)	lb (kg)	lb (kg)	lb (kg)	lb (kg)	lb (kg)	lb (kg)	lb (kg)	ft-in (mm)
19-8 (6)	-	-	6,989 (3,170)	6,989 (3,170)	6,967 (3,160)	6,967 (3,160)	-	-	6,923 (3,140)	6,923 (3,140)	18-1 (5,505)
14-9 (4.5)	9,237 (4,190)	9,237 (4,190)	7,959 (3,610)	7,959 (3,610)	7,253 (3,290)	7,253 (3,290)	6,923 (3,140)	6,658 (3,020)	6,261 (2,840)	5,886 (2,670)	21-2 (6,450)
9-10 (3)	-	-	10,097 (4,580)	10,097 (4,580)	8,356 (3,790)	8,356 (3,790)	7,430 (3,370)	6,482 (2,940)	6,085 (2,760)	5,137 (2,330)	22-10 (6,952)
4-11 (1.5)	-	-	12,280 (5,570)	10,847 (4,920)	9,612 (4,360)	8,003 (3,630)	8,113 (3,680)	6,217 (2,820)	6,217 (2,820)	4,872 (2,210)	23-4 (7,107)
0	-	-	13,228 (6,000)	10,450 (4,740)	10,384 (4,710)	7,694 (3,490)	8,576 (3,890)	6,041 (2,740)	6,702 (3,040)	4,982 (2,260)	22-9 (6,938)
-4-11 (-1.5)	16,623 (7,540)	16,138 (7,320)	12,919 (5,860)	10,384 (4,710)	10,296 (4,670)	7,628 (3,460)	8,356 (3,790)	5,997 (2,720)	7,474 (3,390)	5,534 (2,510)	21-1 (6,419)
-9-10 (-3)	-	-	11,155 (5,060)	10,582 (4,800)	8,708 (3,950)	7,804 (3,540)	-	-	7,937 (3,600)	7,275 (3,300)	17-4 (5,290)

Lift Capacities - Dipper Length: 8'2" (2.5 M), T.A.B: 15'5" (4.7 M), Trackshoes: 20" (500 MM), No Bucket - 150X LCD T.A.B.

Reach ft-in (m)	9-10 (3)		13-1 (4)		16-5 (5)		19-8 (6)		Capacity at Max. Reach		
Load point height ft-in (m)	lb (kg)	lb (kg)	lb (kg)	lb (kg)	lb (kg)	lb (kg)	lb (kg)	lb (kg)	lb (kg)	lb (kg)	ft-in (mm)
19-8 (6)	-	-	6,195 (2,810)	6,195 (2,810)	6,261 (2,840)	6,261 (2,840)	-	-	5,534 (2,510)	5,534 (2,510)	19-8 (5,994)
14-9 (4.5)	-	-	7,209 (3,270)	7,209 (3,270)	6,702 (3,040)	6,702 (3,040)	6,415 (2,910)	6,415 (2,910)	5,071 (2,300)	5,071 (2,300)	22-7 (6,871)
9-10 (3)	-	-	9,348 (4,240)	9,348 (4,240)	7,871 (3,570)	7,871 (3,570)	7,033 (3,190)	6,526 (2,960)	4,938 (2,240)	4,740 (2,150)	24-1 (7,345)
4-11 (1.5)	-	-	11,707 (5,310)	10,979 (4,980)	9,215 (4,180)	8,047 (3,650)	7,826 (3,550)	6,239 (2,830)	5,071 (2,300)	4,497 (2,040)	24-7 (7,491)
0	-	-	13,007 (5,900)	10,450 (4,740)	10,163 (4,610)	7,694 (3,490)	8,422 (3,820)	6,019 (2,730)	5,445 (2,470)	4,586 (2,080)	24-1 (7,331)
-4-11 (-1.5)	16,336 (7,410)	15,961 (7,240)	13,051 (5,920)	10,318 (4,680)	10,340 (4,690)	7,562 (3,430)	8,466 (3,840)	5,930 (2,690)	6,239 (2,830)	5,027 (2,280)	22-5 (6,842)
-9-10 (-3)	15,102 (6,850)	15,102 (6,850)	11,773 (5,340)	10,450 (4,740)	9,326 (4,230)	7,650 (3,470)	-	-	7,033 (3,190)	6,173 (2,800)	19-6 (5,943)

Lift capacity front and rear.

Lift capacity full circle.

Notes:
1. Lifting capacities are based on ISO 10567, that is: 75% of minimum tipping load or 87% of hydraulic lift capacity, whichever is the less. Lifting capacities marked* are based on hydraulic capacity.
2. Lift capacities assume that the machine is on firm, level ground.
3. Lift capacities may be limited by local regulations. Please refer to your dealer.

SPECIFICATION 150X

LIFT CAPACITIES - DIPPER LENGTH: 8'10" (2.7 M), T.A.B.: 15'5" (4.7 M), TRACKSHOES: 20" (500 MM), NO BUCKET - 150X LCD T.A.B.

Reach ft-in (m)	9-10 (3)		13-1 (4)		16-5 (5)		19-8 (6)		Capacity at Max. Reach		
Load point height ft-in (m)	lb (kg)	lb (kg)	lb (kg)	lb (kg)	lb (kg)	lb (kg)	lb (kg)	lb (kg)	lb (kg)	lb (kg)	ft-in (mm)
19-8 (6)	-	-	-	-	5,930 (2,690)	5,930 (2,690)	6,173 (2,800)	6,173 (2,800)	5,754 (2,610)	5,754 (2,610)	20-5 (6,228)
14-9 (4.5)	-	-	6,812 (3,090)	6,812 (3,090)	6,393 (2,900)	6,393 (2,900)	6,151 (2,790)	6,151 (2,790)	5,313 (2,410)	5,115 (2,320)	23-3 (7,076)
9-10 (3)	-	-	8,929 (4,050)	8,929 (4,050)	7,584 (3,440)	7,584 (3,440)	6,790 (3,080)	6,526 (2,960)	5,203 (2,360)	4,542 (2,060)	24-9 (7,536)
4-11 (1.5)	-	-	11,332 (5,140)	11,001 (4,990)	8,973 (4,070)	8,047 (3,650)	7,628 (3,460)	6,239 (2,830)	5,335 (2,420)	4,321 (1,960)	25-2 (7,679)
0	-	-	12,809 (5,810)	10,406 (4,720)	10,009 (4,540)	7,672 (3,480)	8,289 (3,760)	5,975 (2,710)	5,710 (2,590)	4,387 (1,990)	24-8 (7,523)
-4-11 (-1.5)	15,741 (7,140)	15,741 (7,140)	13,029 (5,910)	10,229 (4,640)	10,296 (4,670)	7,496 (3,400)	8,444 (3,830)	5,864 (2,660)	6,504 (2,950)	4,784 (2,170)	23-1 (7,048)
-9-10 (-3)	15,454 (7,010)	15,454 (7,010)	11,949 (5,420)	10,318 (4,680)	9,480 (4,300)	7,562 (3,430)	7,363 (3,340)	5,975 (2,710)	6,856 (3,110)	5,798 (2,630)	20-3 (6,179)

LIFT CAPACITIES - DIPPER LENGTH: 9'10" (3.0 M), T.A.B: 15'5" (4.7 M), TRACKSHOES: 20" (500 MM), NO BUCKET - 150X LCD T.A.B.

Reach ft-in (m)	9-10 (3)		13-1 (4)		16-5 (5)		19-8 (6)		Capacity at Max. Reach		
Load point height ft-in (m)	lb (kg)	lb (kg)	lb (kg)	lb (kg)	lb (kg)	lb (kg)	lb (kg)	lb (kg)	lb (kg)	lb (kg)	ft-in (mm)
19-8 (6)	-	-	-	-	5,930 (2,470)	5,930 (2,470)	6,173 (2,570)	6,173 (2,570)	5,754 (2,280)	5,754 (2,280)	21-7 (6,580)
14-9 (4.5)	-	-	6,812 (2,830)	6,812 (2,830)	6,393 (2,710)	6,393 (2,710)	6,151 (2,630)	6,151 (2,630)	5,313 (2,120)	5,115 (2,120)	24-3 (7,388)
9-10 (3)	-	-	8,929 (3,780)	8,929 (3,780)	7,584 (3,250)	7,584 (3,250)	6,790 (2,940)	6,526 (2,940)	5,203 (2,070)	4,542 (1,940)	25-8 (7,830)
4-11 (1.5)	-	-	11,332 (4,910)	11,001 (4,910)	8,973 (3,910)	8,047 (3,680)	7,628 (3,340)	6,239 (2,840)	5,335 (2,130)	4,321 (1,850)	26-2 (7,967)
0	-	-	12,809 (5,680)	10,406 (4,730)	10,009 (4,440)	7,672 (3,480)	8,289 (3,680)	5,975 (2,710)	5,710 (2,280)	4,387 (1,870)	25-8 (7,817)
-4-11 (-1.5)	15,741 (6,900)	15,741 (6,900)	13,029 (5,900)	10,229 (4,610)	10,296 (4,640)	7,496 (3,380)	8,444 (3,810)	5,864 (2,640)	6,504 (2,570)	4,784 (2,030)	24-2 (7,361)
-9-10 (-3)	15,454 (7,240)	15,454 (7,200)	11,949 (5,550)	10,318 (4,630)	9,480 (4,400)	7,562 (3,390)	7,363 (3,520)	5,975 (2,660)	6,856 (2,990)	5,798 (2,410)	21-5 (6,535)

LIFT CAPACITIES - DIPPER LENGTH: 6'10" (2.1 M), MONOBOOM: 15'5" (4.7 M), TRACKSHOES: 20" (500 MM), NO BUCKET - 150X HD T.A.B.

Reach ft-in (m)	9-10 (3)		13-1 (4)		16-5 (5)		19-8 (6)		Capacity at Max. Reach		
Load point height ft-in (m)	lb (kg)	lb (kg)	lb (kg)	lb (kg)	lb (kg)	lb (kg)	lb (kg)	lb (kg)	lb (kg)	lb (kg)	ft-in (mm)
19-8 (6)	-	-	7,672 (3,480)	7,672 (3,480)	6,504 (2,950)	6,504 (2,950)	-	-	6,482 (2,940)	6,482 (2,940)	16-5 (5,001)
14-9 (4.5)	9,326 (4,230)	9,326 (4,230)	8,422 (3,820)	8,422 (3,820)	7,915 (3,590)	7,915 (3,590)	6,371 (2,890)	6,371 (2,890)	5,930 (2,690)	5,930 (2,690)	19-9 (6,027)
9-10 (3)	13,999 (6,350)	13,999 (6,350)	10,604 (4,810)	10,604 (4,810)	8,995 (4,080)	8,995 (4,080)	8,135 (3,690)	8,135 (3,690)	5,864 (2,660)	5,864 (2,660)	21-6 (6,562)
4-11 (1.5)	-	-	12,963 (5,880)	12,566 (5,700)	10,296 (4,670)	9,237 (4,190)	8,796 (3,990)	7,165 (3,250)	6,151 (2,790)	6,063 (2,750)	22-1 (6,726)
0	14,088 (6,390)	14,088 (6,390)	14,088 (6,390)	12,015 (5,450)	11,089 (5,030)	8,863 (4,020)	9,193 (4,170)	6,923 (3,140)	6,878 (3,120)	6,151 (2,790)	21-6 (6,547)
-4-11 (-1.5)	17,902 (8,120)	17,902 (8,120)	13,735 (6,230)	11,751 (5,330)	10,891 (4,940)	8,642 (3,920)	-	-	8,422 (3,820)	6,790 (3,080)	19-8 (5,994)
-9-10 (-3)	14,947 (6,780)	14,947 (6,780)	11,618 (5,270)	11,618 (5,270)	-	-	-	-	8,708 (3,950)	8,708 (3,950)	16-3 (4,941)

Lift capacity front and rear.

Lift capacity full circle.

Notes:
1. Lifting capacities are based on ISO 10567, that is: 75% of minimum tipping load or 87% of hydraulic lift capacity, whichever is the less. Lifting capacities marked* are based on hydraulic capacity.
2. Lift capacities assume that the machine is on firm, level ground.
3. Lift capacities may be limited by local regulations. Please refer to your dealer.

LIFT CAPACITIES - DIPPER LENGTH: 8'2" (2.5 M), MONOBOOM: 15'5" (4.7 M), TRACKSHOES: 20" (500 MM), NO BUCKET - 150X HD T.A.B.

Reach ft-in (m)	9-10 (3)		13-1 (4)		16-5 (5)		19-8 (6)		Capacity at Max. Reach		
Load point height ft-in (m)	lb (kg)	lb (kg)	lb (kg)	lb (kg)	lb (kg)	lb (kg)	lb (kg)	lb (kg)	lb (kg)	lb (kg)	ft (mm)
19-8 (6)	-	-	6,746 (3,060)	6,746 (3,060)	7,077 (3,210)	7,077 (3,210)	-	-	5,269 (2,390)	5,269 (2,390)	18-1 (5,508)
14-9 (4.5)	-	-	7,584 (3,440)	7,584 (3,440)	7,275 (3,300)	7,275 (3,300)	7,165 (3,250)	7,165 (3,250)	4,872 (2,210)	4,872 (2,210)	21-2 (6,453)
9-10 (3)	12,434 (5,640)	12,434 (5,640)	9,789 (4,440)	9,789 (4,440)	8,444 (3,830)	8,444 (3,830)	7,694 (3,490)	7,496 (3,400)	4,828 (2,190)	4,828 (2,190)	22-10 (6,955)
4-11 (1.5)	17,350 (7,870)	17,350 (7,870)	12,324 (5,590)	12,324 (5,590)	9,877 (4,480)	9,304 (4,220)	8,488 (3,850)	7,209 (3,270)	5,027 (2,280)	5,027 (2,280)	23-4 (7,110)
0	15,388 (6,980)	15,388 (6,980)	13,845 (6,280)	12,059 (5,470)	10,891 (4,940)	8,885 (4,030)	9,061 (4,110)	6,945 (3,150)	5,556 (2,520)	5,556 (2,520)	22-9 (6,941)
-4-11 (-1.5)	18,409 (8,350)	17,924 (8,130)	13,911 (6,310)	11,707 (5,310)	11,001 (4,990)	8,642 (3,920)	8,951 (4,060)	6,768 (3,070)	6,658 (3,020)	6,195 (2,810)	21-1 (6,422)
-9-10 (-3)	16,028 (7,270)	16,028 (7,270)	12,368 (5,610)	11,618 (5,270)	9,612 (4,360)	8,554 (3,880)	-	-	8,311 (3,770)	7,650 (3,470)	17-11 (5,453)

LIFT CAPACITIES - DIPPER LENGTH: 8'10" (2.7 M), MONOBOOM: 15'5" (4.7 M), TRACKSHOES: 20" (500 MM), NO BUCKET - 150X HD T.A.B.

Reach ft-in (m)	9-10 (3)		13-1 (4)		16-5 (5)		19-8 (6)		Capacity at Max. Reach		
Load point height ft-in (m)	lb (kg)	lb (kg)	lb (kg)	lb (kg)	lb (kg)	lb (kg)	lb (kg)	lb (kg)	lb (kg)	lb (kg)	ft (mm)
19-8 (6)	-	-	6,239 (2,830)	6,239 (2,830)	6,614 (3,000)	6,614 (3,000)	-	-	5,445 (2,470)	5,445 (2,470)	18-9 (5,721)
14-9 (4.5)	-	-	7,099 (3,220)	7,099 (3,220)	6,923 (3,140)	6,923 (3,140)	6,834 (3,100)	6,834 (3,100)	5,071 (2,300)	5,071 (2,300)	21-9 (6,635)
9-10 (3)	11,618 (5,270)	11,618 (5,270)	9,326 (4,230)	9,326 (4,230)	8,113 (3,680)	8,113 (3,680)	7,408 (3,360)	7,408 (3,360)	5,049 (2,290)	5,049 (2,290)	23-4 (7,124)
4-11 (1.5)	16,711 (7,580)	16,711 (7,580)	11,949 (5,420)	11,949 (5,420)	9,612 (4,360)	9,304 (4,220)	8,267 (3,750)	7,187 (3,260)	5,313 (2,410)	5,313 (2,410)	23-10 (7,275)
0	16,072 (7,290)	16,072 (7,290)	13,647 (6,190)	12,059 (5,470)	10,714 (4,860)	8,863 (4,020)	8,929 (4,050)	6,923 (3,140)	5,864 (2,660)	5,445 (2,470)	23-4 (7,110)
-4-11 (-1.5)	18,563 (8,420)	17,902 (8,120)	13,911 (6,310)	11,684 (5,300)	10,979 (4,980)	8,598 (3,900)	8,951 (4,060)	6,724 (3,050)	6,989 (3,170)	5,908 (2,680)	21-8 (6,605)
-9-10 (-3)	16,469 (7,470)	16,469 (7,470)	12,610 (5,720)	11,552 (5,240)	9,877 (4,480)	8,488 (3,850)	-	-	8,135 (3,690)	7,187 (3,260)	18-7 (5,668)

LIFT CAPACITIES - DIPPER LENGTH: 9'10" (3.0 M), MONOBOOM: 15'5" (4.7 M), TRACKSHOES: 20" (500 MM), NO BUCKET - 150X HD T.A.B.

Reach ft-in (m)	9-10 (3)		13-1 (4)		16-5 (5)		19-8 (6)		Capacity at Max. Reach		
Load point height ft-in (m)	lb (kg)	lb (kg)	lb (kg)	lb (kg)	lb (kg)	lb (kg)	lb (kg)	lb (kg)	lb (kg)	lb (kg)	ft (mm)
19-8 (6)	-	-	-	-	6,041 (2,740)	6,041 (2,740)	5,379 (2,440)	5,379 (2,440)	4,806 (2,180)	4,806 (2,180)	19-11 (6,081)
14-9 (4.5)	-	-	6,460 (2,930)	6,460 (2,930)	6,437 (2,920)	6,437 (2,920)	6,415 (2,910)	6,415 (2,910)	4,497 (2,040)	4,497 (2,040)	22-10 (6,948)
9-10 (3)	10,450 (4,740)	10,450 (4,740)	8,664 (3,930)	8,664 (3,930)	7,672 (3,480)	7,672 (3,480)	7,077 (3,210)	7,077 (3,210)	4,497 (2,040)	4,497 (2,040)	24-4 (7,416)
4-11 (1.5)	15,741 (7,140)	15,741 (7,140)	11,398 (5,170)	11,398 (5,170)	9,237 (4,190)	9,237 (4,190)	8,003 (3,630)	8,003 (3,630)	4,696 (2,130)	4,696 (2,130)	24-10 (7,561)
0	17,108 (7,760)	17,108 (7,760)	13,338 (6,050)	12,103 (5,490)	10,494 (4,760)	8,907 (4,040)	8,752 (3,970)	6,945 (3,150)	5,137 (2,330)	5,137 (2,330)	24-3 (7,403)
-4-11 (-1.5)	18,695 (8,480)	17,857 (8,100)	13,889 (6,300)	11,662 (5,290)	10,957 (4,970)	8,576 (3,890)	8,973 (4,070)	6,702 (3,040)	6,063 (2,750)	5,534 (2,510)	22-8 (6,919)
-9-10 (-3)	17,020 (7,720)	17,020 (7,720)	12,963 (5,880)	11,486 (5,210)	10,207 (4,630)	8,444 (3,830)	7,893 (3,580)	6,636 (3,010)	7,804 (3,540)	6,592 (2,990)	19-9 (6,032)

Lift capacity front and rear.

Lift capacity full circle.

Notes:
1. Lifting capacities are based on ISO 10567, that is: 75% of minimum tipping load or 87% of hydraulic lift capacity, whichever is the less. Lifting capacities marked* are based on hydraulic capacity.
2. Lift capacities assume that the machine is on firm, level ground.
3. Lift capacities may be limited by local regulations. Please refer to your dealer.

SPECIFICATION 150X

LIFT CAPACITIES - DIPPER LENGTH: 17'5" (5.3 M), MONOBOOM: 24'3" (7.4 M), TRACKSHOES: 20" (500 MM), NO BUCKET - 150X LC LR

Reach ft-in (m)	9-10 (3)		19-8 (6)		29-6 (9)		39-4 (12)		Capacity at Max. Reach		
Load point height ft-in (m)	lb (kg)	lb (kg)	lb (kg)	lb (kg)	lb (kg)	lb (kg)	lb (kg)	lb (kg)	lb (kg)	lb (kg)	ft-in (mm)
29-6 (9)	-	-	-	-	2,359 (1,070)	2,359 (1,070)	-	-	1,720 (780)	1,720 (780)	30-9 (9,384)
24-7 (7.5)	-	-	-	-	2,668 (1,210)	2,668 (1,210)	-	-	1,653 (750)	1,653 (750)	34-2 (10,410)
19-8 (6)	-	-	-	-	2,800 (1,270)	2,800 (1,270)	-	-	1,631 (740)	1,631 (740)	36-7 (11,142)
14-9 (4.5)	-	-	3,505 (1,590)	3,505 (1,590)	3,064 (1,390)	3,064 (1,390)	-	-	1,653 (750)	1,653 (750)	38-2 (11,635)
9-10 (3)	8,554 (3,880)	8,554 (3,880)	4,453 (2,020)	4,453 (2,020)	3,417 (1,550)	3,417 (1,550)	-	-	1,720 (780)	1,720 (780)	39-1 (11,919)
4-11 (1.5)	6,856 (3,110)	6,856 (3,110)	5,512 (2,500)	5,512 (2,500)	3,814 (1,730)	3,351 (1,520)	1,852 (840)	1,852 (840)	1,830 (830)	1,830 (830)	39-5 (12,010)
0	5,445 (2,470)	5,445 (2,470)	6,415 (2,910)	5,556 (2,520)	4,167 (1,890)	3,153 (1,430)	-	-	1,984 (900)	1,984 (900)	39-1 (11,911)
-4-11 (-1.5)	6,460 (2,930)	6,460 (2,930)	7,033 (3,190)	5,203 (2,360)	4,167 (1,890)	3,153 (1,430)	-	-	2,227 (1,010)	2,028 (920)	38-1 (11,618)
-9-10 (-3)	8,113 (3,680)	8,113 (3,680)	7,363 (3,340)	5,027 (2,280)	4,497 (2,040)	2,998 (1,360)	-	-	2,601 (1,180)	2,161 (980)	36-6 (11,115)
-14-9 (-4.5)	10,141 (4,600)	10,141 (4,600)	7,363 (3,340)	4,982 (2,260)	4,453 (2,020)	2,866 (1,300)	-	-	3,197 (1,450)	2,381 (1,080)	34-0 (10,372)
-19-8 (-6)	12,610 (5,720)	12,610 (5,720)	7,011 (3,180)	5,049 (2,290)	4,343 (1,970)	2,932 (1,330)	-	-	4,123 (1,870)	2,800 (1,270)	30-7 (9,331)
-24-7 (-7.5)	11,508 (5,220)	11,508 (5,220)	6,173 (2,800)	5,247 (2,380)	-	-	-	-	4,387 (1,990)	3,682 (1,670)	25-10 (7,873)
-29-6 (-9)	-	-	-	-	-	-	-	-	4,652 (2,110)	4,652 (2,110)	18-8 (5,682)

Lift capacity front and rear.

Lift capacity full circle.

Notes:
1. Lifting capacities are based on ISO 10567, that is: 75% of minimum tipping load or 87% of hydraulic lift capacity, whichever is the less. Lifting capacities marked* are based on hydraulic capacity.
2. Lift capacities assume that the machine is on firm, level ground.
3. Lift capacities may be limited by local regulations. Please refer to your dealer.

Your nearest JCB Dealer

9999/6081 en-US 07/19 Issue 2 DWUSA 5311

150X

JCB North America
2000 Bamford Blvd., Pooler, Georgia, 31322 Tel: (912) 447-2000
Download the very latest information on this product range at www.jcb.com

JCB inc. All rights reserved. No part of this publication may be reproduced, stored in a retrieval system, or transmitted in any form or by any other means, electronic, mechanical, photocopying or otherwise, without prior permission from JCB inc. All references in this publication to operating weights, sizes, capacities and other performance measurements are provided for guidance only and may vary dependant upon the exact specification of machine. They should not therefore be relied upon in relation to suitability for a particular application. Guidance and advice should always be sought from your JCB Dealer. JCB reserves the right to change specifications without notice. Illustrations and specifications shown may include optional equipment and accessories. The JCB logo is a registered trademark of J C Bamford Excavators Ltd.

/JCBNA /JCBNA /JCBNORTHAMERICA