Infrastructure Solutions Group Inc.
www.InfraSolutionsGroup.com
Phone: (804) 833-8048 **Fax:** (804) 730-4242

Quote From:
Infrastructure Solutions Group, Inc.
8383 Old Richfood Road
Mechanicsville, VA 23116

Quote To:
Virginia Sheriff's Association

Prepared by: Pete Kurz

VSA Item #3351 - Build

Product ID	Description	Quantity	Unit Price
E-RX-SYS-SAT-21	RXSAT Stand Alone System		$164,694.00
E-RX-SYS-SAT-COMBO-21	RX/RXSAT Combo System		$200,799.00
E-RX-SYS-SAT-COMBO-500-21	RX/RXSAT Combo 500M System		$226,000.00
E-RX-SYS-SAT-500-21	RXSAT 500M Stand Alone System		$188,237.00
E-RX-SYS-SAT-ADD-BASIC-21	RXSAT Add On to Basic RX System		$137,359.00
E-RX-SYS-SAT-ADD-PRO-21	RXSAT Add on to PRO RX System		$119,735.00

]

ROVVER X SAT II

Lateral Launch

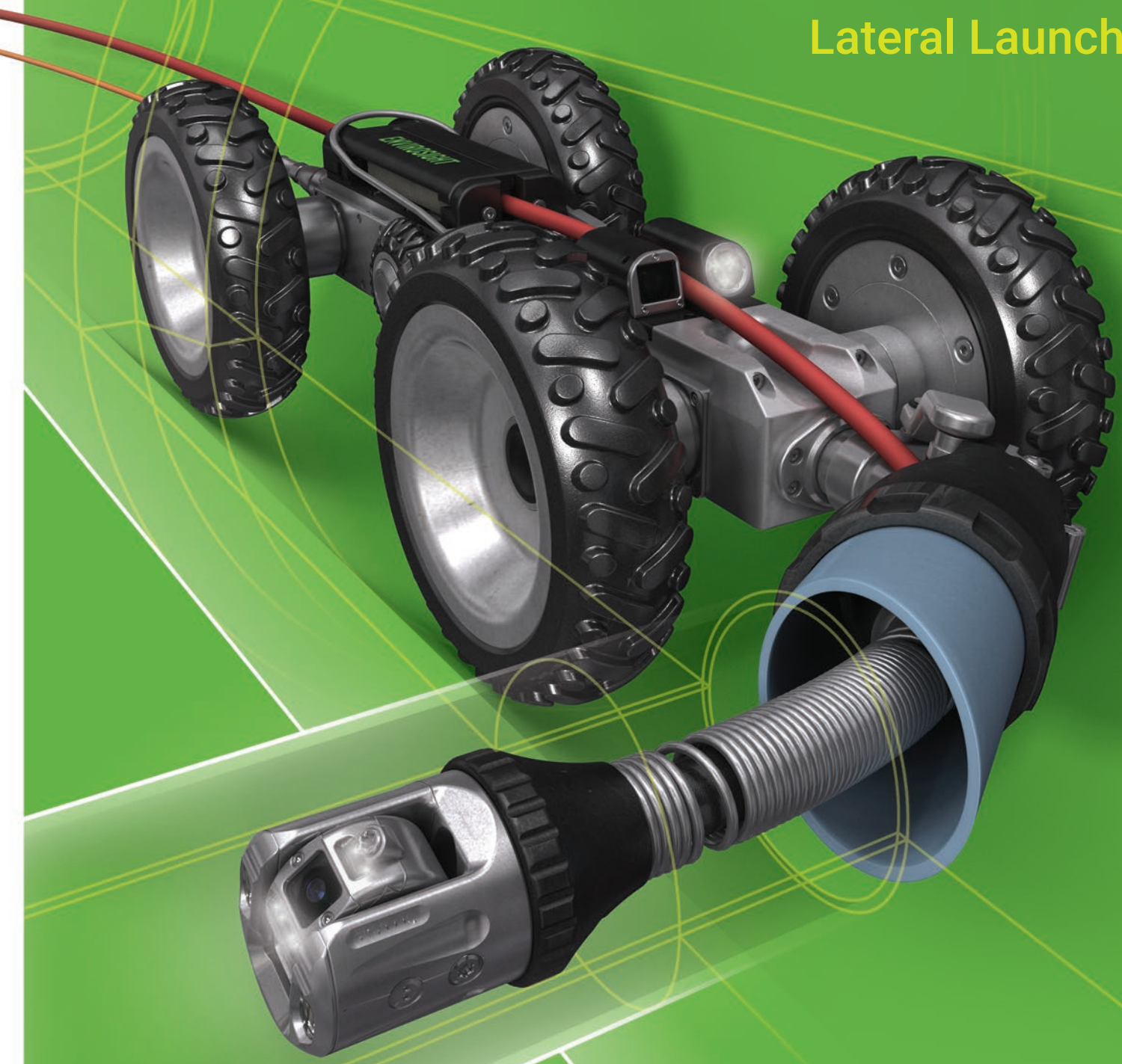

ENVIROSIGHT

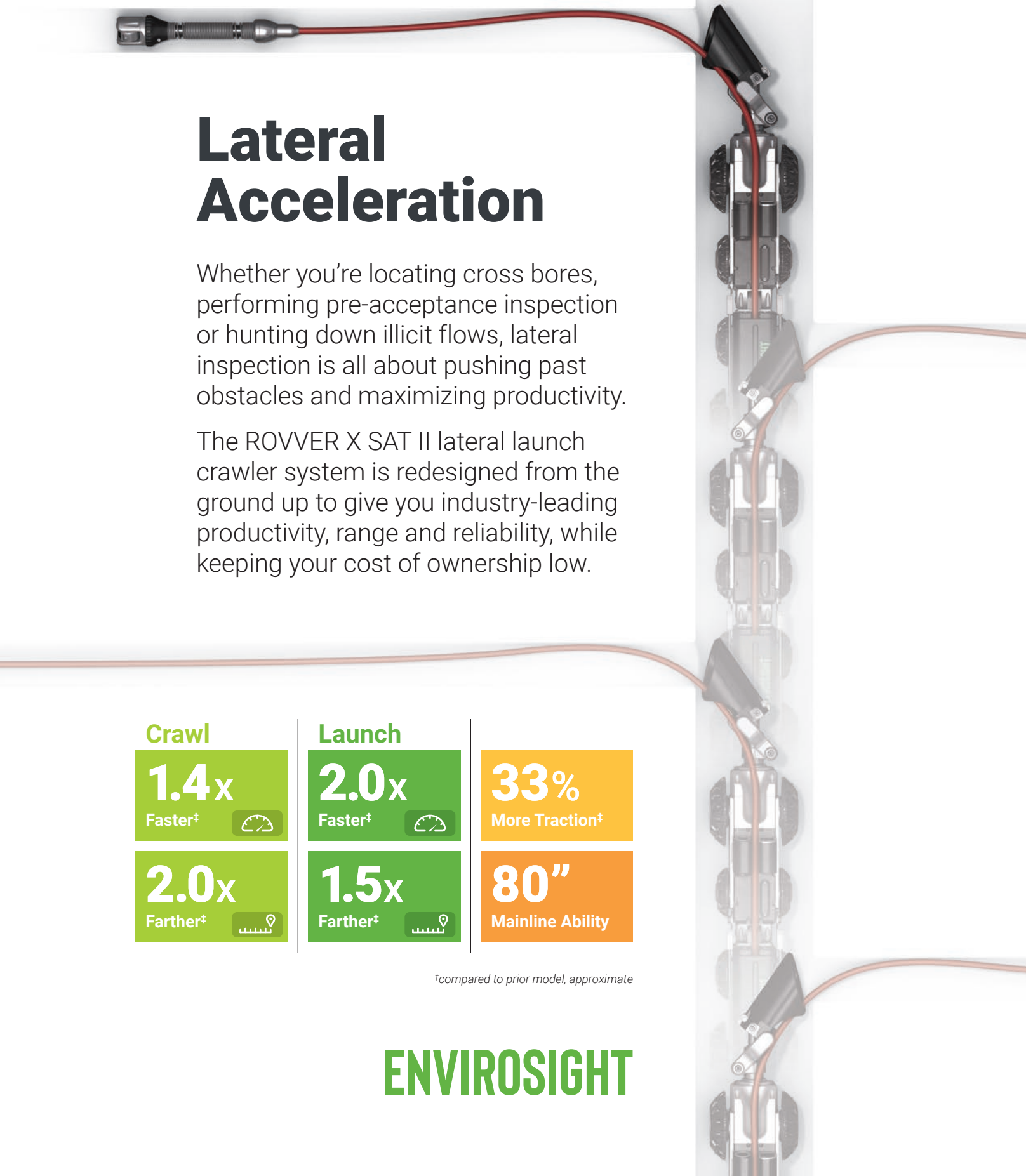

Lateral Acceleration

Whether you're locating cross bores, performing pre-acceptance inspection or hunting down illicit flows, lateral inspection is all about pushing past obstacles and maximizing productivity.

The ROVVER X SAT II lateral launch crawler system is redesigned from the ground up to give you industry-leading productivity, range and reliability, while keeping your cost of ownership low.

Crawl	Launch	
1.4x Faster‡	**2.0x** Faster‡	**33%** More Traction‡
2.0x Farther‡	**1.5x** Farther‡	**80"** Mainline Ability

‡compared to prior model, approximate

ENVIROSIGHT

Launch with Confidence.

Fed, Not Shredded

Our new, patent-pending belt drive maximizes your uptime by gently yet powerfully feeding the push rod as far as 147' up laterals. It won't shred your push rod with abrasive wheels—and the mechanism is designed for easy cleaning and toolless belt changes in the field.

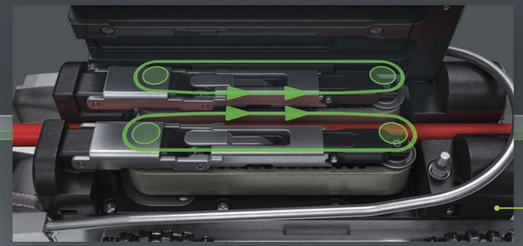

20/20 Hindsight

Positioned above flow, a color back-up camera with LED illumination helps you manage cable during reverse travel.

Pivotal Flexibility

A hinged mid-section lets you deploy through vertical accesses as narrow as 12.5" diameter, and locks rigid when not needed.

Wheels, Reinvented

With quick-change wheels, you can easily reconfigure for different pipe materials and sizes—no tools required.

Bullseye

A 5 megapixel targeting camera with 130-degree lens lets you digitally pan, tilt and zoom for precise, confident launching.

All Within Reach

Use the standard launch tube in small sewer mains, and switch to the adjustable one when larger mains demand PVC launch tubes of varying length. (See reverse.)

Pan, Tilt ... Vroom

Use the ROVVER X SAT II's pan/tilt launch camera to get a closer look at defects, and navigate through bends with its detachable carbon fiber steering probe at speeds up to 23 fpm. An axial camera is also available for lateral diameters as small as 2" diameter.

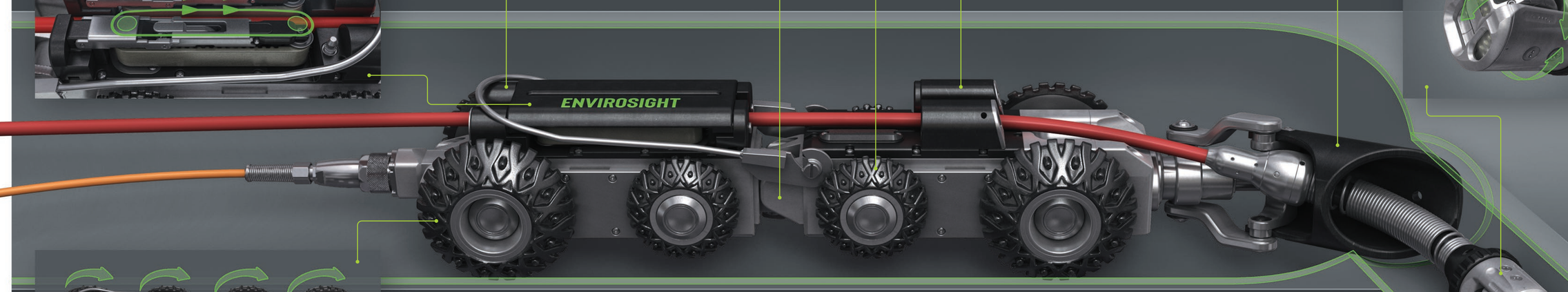

ENVIROSIGHT

Octraction™

A steerable 8×8 drive train—you won't find it on any other sewer crawler. Octraction™ gives ROVVER X SAT II the unique ability to maneuver past offsets, obstacles and sludge, achieving a 984' crawl range.

speed	**98 fpm** crawl	**23 fpm** launch
distance	**984'** crawl	**147'** launch

ROVVER X

SAT II

Lateral Launch

above: small end wheels with launch chute

above: medium end wheels with launch chute

above: large end wheels with extension tube

above: XL end wheels with extension tubes

below: XXL end wheels with extension tubes

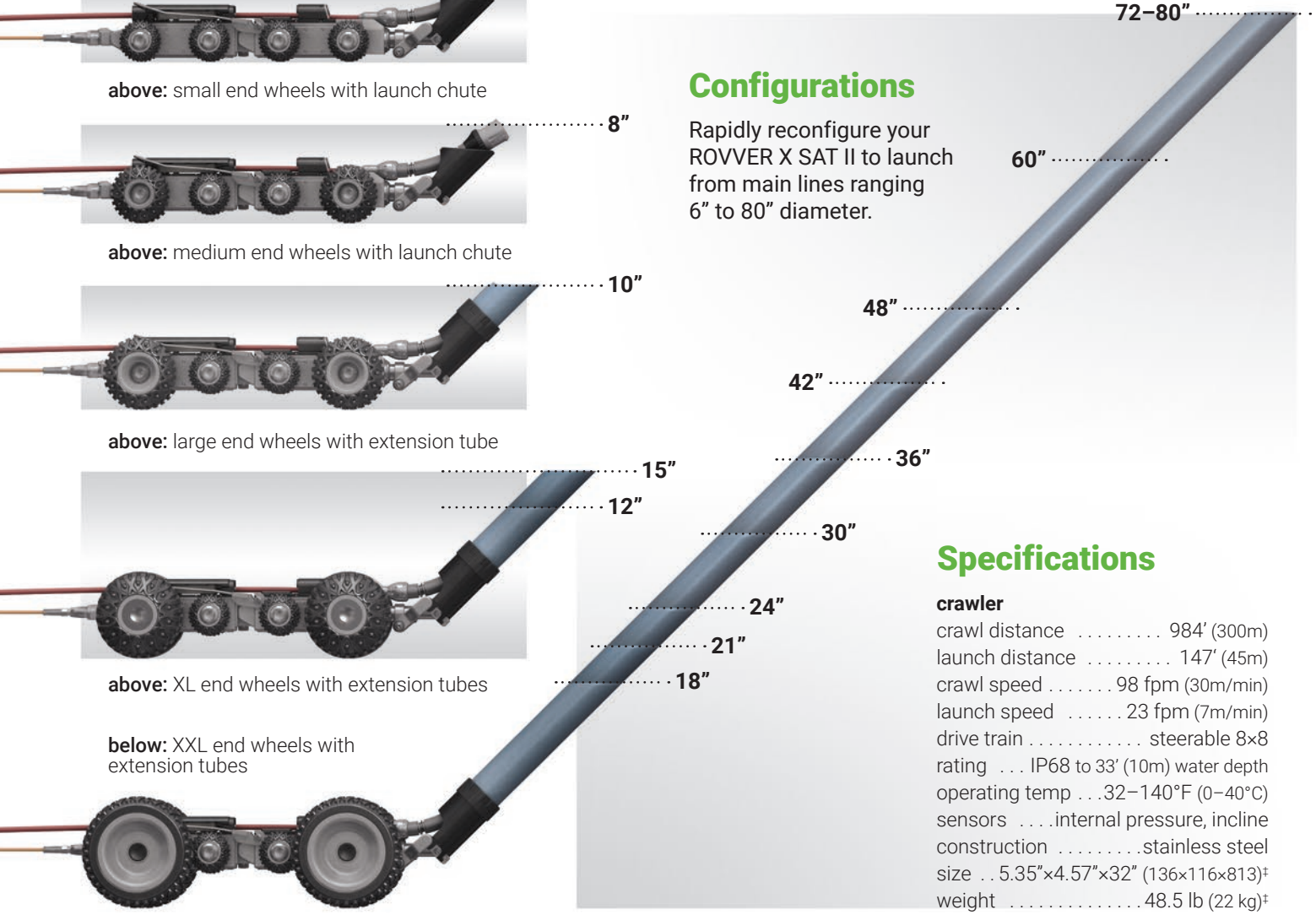

Configurations

Rapidly reconfigure your ROVVER X SAT II to launch from main lines ranging 6” to 80” diameter.

Specifications

crawler

crawl distance . . . . . 984’ (300m)
launch distance . . . . . 147’ (45m)
crawl speed . . . . . 98 fpm (30m/min)
launch speed . . . . . 23 fpm (7m/min)
drive train . . . . . steerable 8×8
rating . . . IP68 to 33’ (10m) water depth
operating temp . . .32–140°F (0–40°C)
sensors . . . .internal pressure, incline
construction . . . . . .stainless steel
size . . 5.35”×4.57”×32” (136×116×813)‡
weight . . . . . 48.5 lb (22 kg)‡

pan/tilt launch camera (detachable)

line sizes . . . 2½–12” dia. (DN60–300)
resolution . . . . . standard
pan, tilt . . . . . 360, +120/-30 deg
sonde . . . . . .on/off 512/640/33k Hz
lamps . . . . . .shadowless LED

axial launch camera (detachable)

line sizes . . . . . 2–12” dia. (DN75–300)
resolution . . . . . standard
sonde . . . . . .on/off 512/640/33k Hz
lamps . . . . . .shadowless LED

targeting camera (integral)

total field of view . . . . . 130 deg
resolution . . . . . .5 megapixel
pan/tilt/zoom . . . . . digital
illumination . . . . . LED

reverse camera (integral)

resolution . . . . . standard
illumination . . . . . LED

‡without wheels and launch chute

Operator Controls

The ROVVER X SAT II desktop command center puts every function at your fingertips, so you can inspect with maximum productivity—all from the comfort of your truck’s control studio.

ENVIROSIGHT

(866) 936-8476 • www.envirosight.com

©2020 Envirosight. All rights reserved. Envirosight and ROVVER X are registered trademarks of Envirosight. Specifications subject to change without notice. Rev. 02/01/2020

Envirosight

ROVVER X

The Power of One

Safe, Easy and Advanced Sewer Inspection Crawler

The Power of One

ROVVER X is the one system that lets you do everything—control inspections, view and record digital video, log observations, generate reports, and link directly to asset-management software. All this capability is packed into a simple three-piece layout, with no CCU or other components to clutter your truck.

ROVVER X is built on a powerful digital backbone. Not only can you add side-scanning, laser profiling and lateral launch, you can view status from onboard sensors, automate tasks with macros, and measure defects on-screen. And future capabilities are limitless—ROVVER X's firmware updates automatically to the latest features and accessory support.

Technology aside, ROVVER X is built for the rigors of sewer work. Twelve wheel options—plus camera lift, carriage and lamp accessories—mean ROVVER X transforms in seconds to inspect any line. Its steerable six-wheel drive navigates past obstacles, and overlapping wheels climb offsets better than tracks.

ROVVER X

Responsive Controls

Control multiple camera and crawler functions at once. • View live and recorded video directly on controller. • Use macros to automate inspection tasks like joint scanning. • Access specialized functions using intuitive touchscreen interface. • Measure features and defects.

WinCan VX software now comes standard with every ROVVER X system. WinCan VX lets you database your inspections, deliver detailed reports, share projects via the cloud, map your data, and achieve PACP compliance.

And upgrading your license gives you access **to:** technology modules (laser, Digisewer, 3D, lateral launch) • enhanced reporting • network installation and enterprise databases (Oracle, SQL) • links to municipal apps (ArcGIS, Hansen, Maximo, CityWorks, GBA, Cartegraph)

Recording

Store digital video and images, and export them via USB media, network port or Wi-Fi. • Review footage directly onscreen.

Reporting

Log observations on touchscreen. • Use standard or custom defect catalogs. • Generate simple reports, or use WinCan for full reporting. • Overlay text on video without external hardware. • View system status and operating history.

observation entry

inspection overview

overlay setup

WinCan Web upload

report generation

measurement tools

Envirosight

Remote Control

Supplied standard, this single-channel wireless remote lets you control camera, crawler, lift and reel.

Visibility

Capture superior video resolution. • Illuminate distant targets with 50% brighter LED light. • Boost illumination in large pipelines with auxiliary lamp. • See above flow with high-mount rear-view camera plus additional rear-view camera on auxiliary lamp.

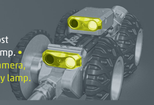

Adaptability

Remotely adjust camera height over 7" range with lift accessory. • Handle pipe of any size, material and condition with 12 wheel options. • Extend height and wheelbase with carriage accessory for pipelines up to 72" diameter.

Maneuverability

Control any number of camera and crawler functions at once. • Pivot in place with zero-degree turning. • Use macros to automate tasks (like joint scanning). • Avoid high-centering on offsets and debris with overlapping wheels.

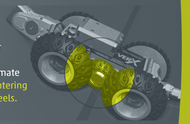

Range

Crawl up to 1000' with standard reel. • Overcome obstacles with unmatched maneuverability and power. • Prevent tangles and maximize range with cable tension control. • Control reel direction, force, speed and mode directly from pendant.

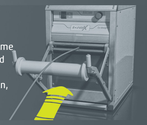

Measurement

Track pipe grade with inclinometer. • Monitor temperature/pressure with onboard sensors. • Locate crawler using built-in sonde. • Easily add laser profiling and side-scanning. • Size defects with twin lasers. • Avoid flips with warnings from roll sensor.

Field-Readiness

Inspect from truck, pickup or ATV using simple 3-component system. • Run off generator or inverter. • Inspect pipelines 6–72" diameter with single, reconfigurable crawler. • Store 1000' of strong, lightweight cable on compact, automated reel. • Transport system in compact, weatherproof enclosure.

The ROVVER X, Digisewer and Envirosight names and logos are trademarks of Envirosight, LLC.
©2016 Envirosight, LLC. All rights reserved. WinCan is a trademark of CD-Lab.

Complete Capability

With many wheel options—plus a detachable lift, carriage and auxiliary lamp—ROVVER X is the only single system that lets you inspect lines 4–96" diameter. With quick-change wheels, you'll be ready in seconds to handle any combination of pipe size, material and condition. (See wheel chart on reverse panel.)

(down to 4" with available RX 95 crawler body)

Power to Maneuver

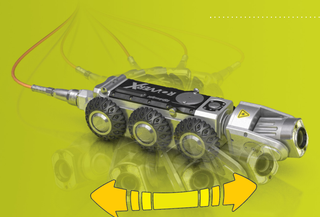

ROVVER was the first crawler with steerable 6-wheel drive, giving operators the agility to navigate past obstacles that stop other crawlers.

ROVVER X adds to that legacy with CAN-bus controls, which allow you to perform multiple functions at once. Now you can steer while panning the camera and adjusting camera lift height. Proportional joysticks give you fine control over speed and direction, and also let you pivot in place.

Many Ways to Inspect

Digisewer. Generate side-scans that capture every detail from pipe wall. With Digisewer, you can inspect three times faster than with CCTV—at a cost and learning curve anyone can manage. With the Digisewer laser ring, you can also measure pipe ovality.

Laser. Onboard lasers can be used to measure defects and ovality. With an optional laser profiling accessory attached, WinCan's laser module can track cross-section along the pipe to determine ovality and create a geometric model.

Lateral Launch. The ROVVER X SAT lateral launch add-on lets you inspect laterals from a mainline, ideal for finding gas line cross-bores and illicit flows. It integrates with any existing ROVVER X system, reducing cost and equipment clutter.

Specifications subject to change without notice. Patents and patents pending. Revised 5/16.

Onboard Intelligence

ROVVER X uses CAN-bus, the same technology found in modern automobiles. This gives it capabilities not available anywhere else:

Automatic Updates: When connected to the Internet, the pendant updates its firmware automatically, ensuring the latest features.

Concurrent Control: Digital communications let you control any number of camera, crawler and accessory functions at once.

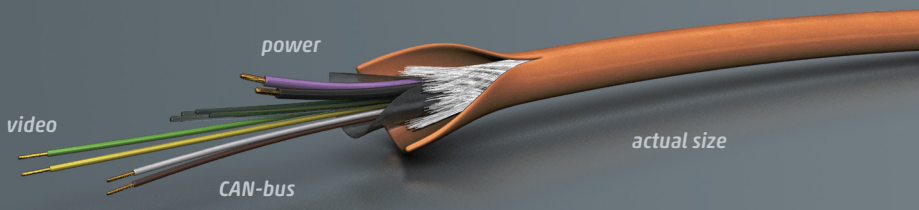

Agility & Uptime: With only six conductors, lightweight ROVVER X cable is easy to pull long distances, and also easy to reterminate. Kevlar gives it a 1000-lb. break strength, and a tough jacket maximizes abrasion resistance.

Future-Readiness: ROVVER X evolves with technology, which means its capabilities can grow with your needs.

Information: Access system status, from real-time sensor data to lifetime service and operating history.

Self-Diagnostics: Connect to a PC with ROVVER X Studio, and our technicians can log in to read error codes and run diagnostics.

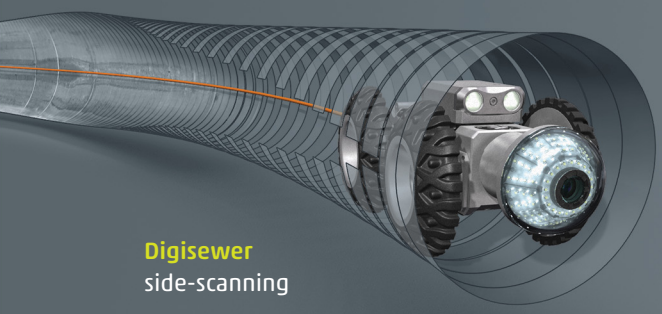

Digisewer
side-scanning

SAT
lateral launch

Quick-Change Wheels

Swapping in seconds with no tools, ROVVER X quick-change wheels address any combination of pipeline diameter, material and condition.

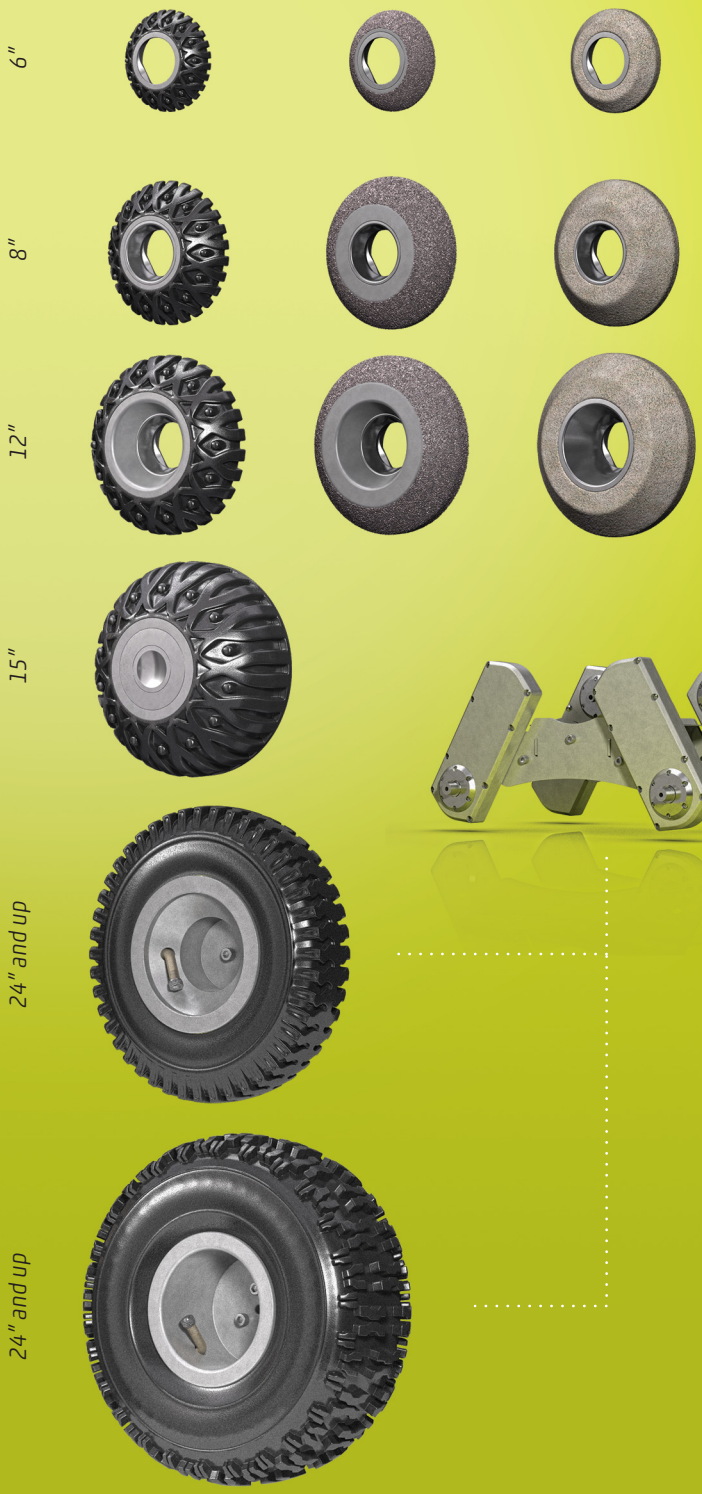

system

ratings ..... CE, NRTL
power ..... 120-240 Vac, 60 Hz
viewing capability..... pipelines 4–96″ dia.

camera (RCX90)

imager ..... color ¼″ CCD
resolution ..... 720 × 576 pixels
zoom lens ..... 120× (10× optical, 12× digital)
pressure rating ..... 1 bar
features ..... auto shutter; auto/manual focus
illumination ..... dimmable 40-LED array
articulation ..... ±145 deg tilt; infinite pan
measurement..... twin laser diodes
sensing ..... temperature, pressure, pan/tilt
size ..... 6.6″ × 3.1″ × 2.8″ (168 × 81 × 72 mm)
weight ..... 3.3 lb (1.5 kg)
materials ..... aluminum, stainless steel

crawler (RX130)

wheels 6
turn radius..... down to 0.0″
camera ..... color rear-view with tri-LED lamp
sensors..... pitch, roll, temperature, pressure
pressure rating ..... 1 bar
size ..... 12.2″ × 4.4″ × 3.2″ (310 × 111 × 90 mm)
weight ..... 13.2 lb (6 kg)
materials ..... aluminum, stainless steel
sonde transmitter ..... 33 kHz / 512 Hz

control pendant (VC500)

controls .... joysticks, touchscreen, power, stop
touchscreen .. 10.1″ color TFT, 1280×800 pixels, 1280 cd/m^2, 150-deg view angle
video capture ..... MPEG-4 AVC (H.256)
image capture ..... JPEG or PNG
internal storage ..... 32 GB
connectivity ... LAN (RJ45), USB, Wi-Fi, HDMI, BNC
size ..... 11″ × 10.5″ × 2.8″ (280 × 267 × 71 mm)
weight ..... 4 lb (1.81 kg)
housing ..... plastic (ABS, PC), IP55-rated
operating temp ..... 32 to 140°F
storage temp ..... -22 to 158°F

aux. lamp (optional)

lamps ..... four (4) tri-LED lamps
dimensions ... 4.6″×5.2″×5.2″ (117×132×132 mm)
materials ..... aluminum, stainless steel

cable reel (RAX300)

cable length ..... 1000′ (300 m)
cable diameter..... ¼″ (6.5 mm)
cable weight..... 0.03 lb/ft
cable strength ..... 1000 lb
cable conductors 6
controls (local) ..... power, emergency stop
controls (via pendant)..... auto/manual, speed, forward/reverse, pull strength
sensors..... tension, tilt
size ..... 24.2″×12.4″×19.3″ (620×315×490 mm)
weight ..... 68.3 lb (31 kg)
connections..... pendant, service, video in/out

camera lift (optional)

lift range ..... 3.1–10.2″ (132-312 mm)
materials ..... aluminum, stainless steel

carriage (optional)

wheelbase (w/l)..... 14.5″/12.2″ (368/310 mm)
weight ..... 34.2 lb (15.5 kg)
materials ..... aluminum, stainless steel

aux. lamp/rear camera (optional)

forward illumination ..... twin tri-LED lamps
camera ..... color rear-view with tri-LED lamp
sonde transmitter ..... 33 kHz / 512 Hz
materials ..... aluminum, stainless steel

basic system

- RX130 crawler body
- RCX90 camera head
- RAX300 reel with 1000′ cable
- VC500 control pendant
- WinCan VX software (basic)
- single-channel digital wireless remote control
- small rubber wheels (6)
- medium rubber wheels (4)
- medium grease wheels (4)
- climber wheels (2)
- large rubber wheels (4)
- crawler body transport case
- camera head transport case
- tools (wrenches, pressure kit)

options/accessories

- laser profiler
- Digisewer side-scan camera
- lateral launch crawler/reel
- remote camera lift
- large-pipe carriage
- large- and small-dia. crawlers
- aux. lamp/rear-view camera
- desktop mount for pendant
- USB media for pendant
- wheel sets (see chart on flap)
- cable management accessories
- lowering devices
- WinCan VX software (advanced)
- other accessories

Envirosight

www.envirosight.com

(866) 936-8476

111 Canfield Ave., Unit B3
Randolph, NJ 07869

Regional sales, support and service across North and South America.

The industry's most extensive network of service partners.

preferred build-out

We've analyzed the preferences of our inspection vehicle customers to identify the most popular configurations. We offer these as our Preferred Build-Outs.

We can also build inspection vehicles of any chassis and size, with production facilities on each coast for responsive delivery. We stock select chassis and boxes, and can retrofit new systems into existing trucks.