GranTurk equipment co., inc.

home office:
one schuylkill parkway
building b
bridgeport, pa 19405-1069
phone (610) 239-9800
fax (610) 239-9806

branch office:
1415 bush street
baltimore, md 21230

phone (410) 837-5570
fax (410) 837-1024

JULY 8, 2022

DESCRIPTION

LABRIE WITTKE STARLIGHT 40 YD (34+6) #202

12 C.Y. hopper

Packer panel: Full eject type, full height

Hardox Steel Construction (Starlight and Superduty)

Arms rated capacity: 10,000 lbs

Standard arms lifting capacity: 8,000 lbs

Forks std thickness : Starlight and Featherweight :1, Superduty : 1-1/2"

Front mounted Gear pump Muncie Live Pak

Two chromed double acting telescopic packer cylinders

Onboard diagnostic tool with LCD display

Circuit breakers with manual reset

5 lbs fire extinguisher, first aid kit & triangle kit

Fall protection anchor points on Roof

ANSI Z245.1-2012 compliant

Zinc-plated hydraulic tubing

Body blasted with steel grit

Marine rust inhibitor treatment on body

Warranty on Body & Hydraulics: 1 Year

Broom and shovel kit installed on back side of packer panel

Body valve on streetside wall

Delivery After Receipt of Chassis

FREIGHT: To Be Determined at Time of Order

STEEL (Material) SURCHARGE: May Change at Time of Order

OPTIONS: Available at 6% off MSRP

CONTACT: Marc Browning to discuss options that may be required for your local government Agency. Cell # 434-390-1899

ANNE C. RITCHIE – PRESIDENT

Anne C. Ritchie

labrie plus
SERVICE & PARTS

Standard Limited Product Warranty

Subject to the other provisions hereof, LABRIE ENVIRONMENTAL GROUP, hereinafter called "Labrie" warrants that all new Labrie products (the "Product") shall be free of defects in material and workmanship under normal use and service for a period of ONE (1) YEAR after delivery to the first registered customer/end-user.

WITHOUT LIMITATION TO THE OTHER PROVISIONS HEREOF, THIS PRODUCT WARRANTY DOES NOT COVER:

- Any and all components or parts of the Product, including without limitation the vehicle chassis, which are not manufactured and installed by Labrie, whether or not they are covered by an original manufacturer's or supplier's warranty.
- Paint damage due to paint chips, scratches, rust, deterioration of paint due to elements.
- Damages resulting from abuse, misuse of the Product or from negligence or accidents.
- Damages resulting from use of the Product other than for its intended purpose or in a manner other than its intended normal use and service.
- Damages caused by improper maintenance of the Product including, without limitation, failure to comply with the maintenance requirements set forth in the Product's Parts and Maintenance Manual.
- Damages caused by the operation of the Product with parts or components known by the customer/end-user to be defective or in need of maintenance.
- Parts, components, or systems which have been modified without the express authorization of Labrie or of an authorized Labrie distributor.
- Repairs which are not completed or otherwise expressly authorized by Labrie or an authorized Labrie distributor.
- Repairs or modifications which have been authorized by Labrie or an authorized Labrie distributor that are performed by personnel which is not qualified to perform such repairs or modifications.
- Normal wear item parts including, without limitation, oils, fluids, filters, tracks, rollers, wear shoes, tailgate seals, chains, divider panels, rubber bumpers, incandescent bulbs, grabber fingers & straps, hyd. strainer, gauges, hoses due to abrasion, packer scraper, spill shields, wind deflectors, plastic dividers, deflectors, common hardware, limit switches & actuators, arm or control linkages and heim joints, pneumatic actuators, tipper cart attachment, driveshaft u-joints, remote grease lines, and normal wear of the steel structure.

Standard Limited Product Warranty

- All adjustments and maintenance resulting from normal use and service of the products, products including, but not limited to, cleaners/lubricants, Diesel/CNG fuel, tightening of fasteners & hydraulic fittings, additional labor due to rust/corrosion from lack of maintenance, environmental cleanup, container handling equipment.

- Repair items including but not limited to, travel time, milage or other expenses, labor for field inspection, towing, down time, rental equipment, steam cleaning, sealants, paint for replacement parts, duplicate or temporary repairs, shop supplies, road testing, loss of profits, lease or loan, diagnostic time exceeding one hour, flushing of hydraulic system, any other consequential losses, damages or delays encountered.

For the purposes of this warranty, normal use and service means the operation of the new Product for fifty (50) hours per week for its intended purpose and in compliance with the operation and maintenance instructions which are provided by Labrie in the Product's operation and maintenance manuals. It is the customer/end-user's responsibility to make sure that all operators are familiar and comply with the operation manual and the warning decals on the Product.

In the event a part or component of the Product fails or becomes defective during the warranty period and, in the opinion of Labrie, such failure or defect results from Labrie's material or workmanship, the part or component shall be repaired or replaced by Labrie or an authorized distributor at no cost provided that the unit is brought to an authorized distributor's service facility. However, the aforementioned repair or replacement of parts or components may be performed by the customer/end-user as provided herein if specifically authorized by Labrie or an authorized Labrie distributor.

Because the Product is engineered to work only with genuine Labrie parts and components, this warranty shall be void and of no effect if i) the Product is modified other than by Labrie or by an authorized Labrie distributor or other than in accordance with a specific authorization and instructions from Labrie or from an authorized Labrie distributor or ii) if parts and components of any other manufacturer are used as substitutes for genuine Labrie parts and components.

LABRIE MAKES NO WARRANTY AS TO MERCHANTIBILITY, FITNESS FOR USE, LEGALITY OF OPERATION IN ANY JURISDICTION OR ANY IMPLIED WARRANTY OF ANY KIND OR NATURE. LABRIE SHALL NOT BE LIABLE FOR ANY SPECIAL OR CONSEQUENTIAL DAMAGES OF ANY KIND OR NATURE. NO OTHER PERSON, FIRM, CORPORATION, INCLUDING THE LABRIE DISTRIBUTOR, CAN BIND LABRIE TO ANY WARRANTY OTHER THAN THIS WARRANTY OR OTHERWISE MODIFY SAID WARRANTY.

Labrie reserves the right to redesign and/or discontinue the manufacture of parts, components, and Products.

Certificate

Certificate No.: **30102-1-03**

First delivery date: **April 30, 1999**
Expiry date: **April 23, 2012**

The Bureau de normalisation du Québec (BNQ) certifies that the quality management system implemented by:

GROUPE ENVIRONNEMENTAL LABRIE INC.

covering the following activities:

Design, manufacture and distribution of solid waste equipments including parts sale

carried out at the address:

175, route Du Pont, Lévis (Québec) G7A 2T3

has been assessed and found to comply with the requirements of:

ISO 9001:2000

This certificate is issued in accordance with BNQ procedures.
Its validity may be verified at the address www.bnq.qc.ca/certificates.

In testimony whereof, have signed in Québec, on April 27, 2009,

Assistant Director
Bureau de normalisation du Québec

Program Manager
Bureau de normalisation du Québec

The BNQ program related to this management system certification is accredited by the Standards Council of Canada. Further clarifications regarding the scope of this certificate and the applicability of ISO 9001:2000 requirements may be obtained by consulting the organization.
This certificate remains the property of the BNQ and could be withdrawn from the company in accordance with BNQ procedures.

WITTKE

labrie

CNG

CNG READY
SINCE 2001

THE WITTKE™ HISTORY

2003 Wittke Starlight™

2005 Labrie Optimizer™

"Our Wittke Starlight™ frontloaders have proven to be efficient, dependable workhorses and the Digiload scaling systems are very accurate and easy to use."

Jim McGurl
Operations Manager-Collections
Occupational Training Center
of Burlington county

"I test drove a front end loader made by Labrie. The arms run very smoothly and I did not have any trash, boxes or debris fall over behind packing blade the two days I drove this truck. I have 29 years in solid waste field and this is the best front end loader I have seen or drove."

Joe White,
Operator
City of Edmond, Oklahoma

"At Veolia, our Wittke Starlights™ are the most cost effective trucks in our frontloader fleet. With their lighter bodies, our Wittke™ allow us to pack more and extend our routes which save us time and money. The Digiload scale system is reliable, very accurate and the weigh in motion system saves us time."

Mario Gilbert,
Waste Collection Manager
Veolia

THE WITTKE™ HISTORY

The Wittke™ name was established in western Canada through the 1980s and early 1990s, when Wittke gained market dominance as a manufacturer of commercial steel refuse containers from their base in Medicine Hat, Alberta, Canada. In the early 1990s Wittke™ developed a frontload refuse body called the Pegasus. Wittke continued to refine the product, and in the mid 90s launched the most productive frontloader in the refuse industry; the Starlight™. Targeted specifically for California and the western region of the U.S. and Canada, the Starlight™ featured a light tare weight, steel weldments of high tensile strength and quick cycle times. Wittke™ quickly sold more than 5,000 Starlight™ bodies, establishing the product as the industry leader. The Superduty™ – a body specifically designed for the stresses and payload requirements of the east coast market was then developed and introduced in the early 2000.

Upon acquiring the Wittke product line in 2006, Labrie took advantage of it's own front-end loader design and combined the best features of both products, adding Abrasion Resistant Steel, and reintroducing the newly enhanced Wittke font-end loader to the market with the fastest and smoothest arm cycle in the industry.

ANYTHING IS POSSIBLE WITH WITTKE™

Just because a frontloader needs to be rugged and strong doesn't mean it needs to be heavy. The Wittke™ body is built using 100% Abrasion Resistant Steel. This means the weight that isn't taken up in the body itself can be added to the payload. More waste in the payload means more cash in your pocket.

Wittke™ frontloaders are strong and dependable. With the fastest and smoothest arm cycle in the industry, your operation will be fast and clean. The details incorporated into the Wittke™ design all contribute to decreased maintenance and ensure a solid, dependable frontloader that will last for years.

Lower maintenance costs will also help your bottom line.

1297
WITTKE

labrie

STARLIGHT X

15,500 LBS
STARLIGHT™
BODY
WEIGHT

10,000 LBS
LIFTING
CAPACITY*

12-14 SEC.
LIFTING
CYCLE

Wittke Starlight™ is known for its agility. Its low body weight maximizes the legal payload capacity and its fast lifting cycle ensures rapid loading on the route. The Starlight™ tackles both residential and commercial routes with ease and with its low body weight, you will be able to collect more material, providing the highest legal payload ever on each collection.

** Optional*

SUPERDUTY

16,700 LBS
SUPERDUTY™ BODY WEIGHT

130,700 LBS
PACKER CYLINDER FORCE

20 SEC.
PACKING CYCLE

Wittke Superduty™ is as rugged as they get. The 100% AR Steel body delivers ultimate strength at the lowest possible body weight. The Wittke Superduty™ is the toughest of all frontloaders; engineered to require nominal maintenance and providing the lowest total cost of ownership.

CERTIFIED FRONTLOADERS

A high-quality product must be made from high-quality materials. AR450 steel is strong yet light by design and has 5 times more abrasion resistance than mild steel. It is the ideal material to build a body that needs to be extremely rugged without giving up payload.

Both the Starlight™ and Superduty™ bodies are built using single sheets of AR steel, eliminating the risk of cracks and corrosion.

The benefit of building a body with such high-quality materials can result in an **8% average savings on maintenance costs alone** and with AR450 providing the greatest tensile strength and lightest weight in its class, Wittke™ frontloaders can also attain a minimum **5% higher legal payload.** This allows the operator to extend his route and increase revenues and AR steel enables these frontloaders to perform under the most extreme conditions.

GET THE FASTEST CYCLE TIME WITH OUR POWERFUL HYDRAULIC DESIGN

Hydraulics provide the force behind any waste-collection vehicle. The Wittke™ hydraulic system has been carefully and thoughtfully engineered, right down to the corrosion-resistant zinc plating on the strategically placed hydraulic lines.

Wittke™ delivers the smoothest lifting arm operation and the quickest cycle time in the industry. The packing cycle takes a mere 18 to 20 seconds and a complete arm cycle takes only 12 to 14 seconds, **increasing productivity by a minimum of 20 minutes per day.*** The high flow hydraulic pump and deceleration valves have been used in combination to achieve the fastest and smoothest cycle times in the industry and our unique "work-at-idle" feature allows for the quietest early morning collection with no sacrifice to speed or compaction.

**based on a 8 hour shift*

DURASCOPE™

DURASCOPE PACKER CYLINDERS*

Packer cylinders operate in one of the harshest environments for all waste hauling equipment. Constantly exposed to debris that can penetrate the seal and contaminate the hydraulic system, these revolutionary cylinders are equipped with:

- nitrated rods;
- an enhanced seal configuration;
- shavers that protect the cylinder from contamination.

Durascope cylinders will **reduce your maintenance costs by an average of 4%.** These details may be hidden, but they are what make the Wittke™ stand out from the rest.

** Optional*

TAILGATE AUTO-LATCH

A tailgate that doesn't require any vertical movement to lock and seal will prevent additional stress and damage to the tailgate seal and improve its longevity. The tailgate on the Wittke™ frontloaders closes straight down and locks without any added friction that may cause premature wear. Wittke™ uses a simple design that improves tailgate seal longevity.

PLOW-SHAPED PACKER PANEL

Debris should be directed into the body and not allowed to accumulate behind the packer. This is why the Wittke™ packer panel was designed with its innovative plow shape. **The panel angles are more efficient and result in a 12% higher compaction ratio** and **25% lower cleaning costs.**

CHROMIUM OVERLAY*

If you want a truly low maintenance frontloader, the parts that receive the most wear need to be made from the strongest materials. That is exactly why we use packer panel wear shoes and tracks made with chromium overlay. These parts move hundreds of times per day, and a typical shoe and track set-up would need to be replaced every 4 to 5 years. **However, with our chromium overlay package, these parts will last over the entire life span of the vehicle.** The kind of detail we have put into the Wittke™ design is something you won't find on any other frontloader in the industry today.

CANOPY SWEEPER*

Lower your risk of leaving debris along the route. With a second lifting of the arms, debris can be swept back into the hopper and not allowed to fall on the ground. The canopy sweeper not only increases the operator's line of sight, but **it can save at least 30 minutes per week of labor.** Wittke™ frontloaders also have gutters strategically built into the canopies to direct the flow of fluid into the hopper thus limiting spillage over the windshield and the cab. Your customers will appreciate both the cleanliness provided by the unique canopy sweeper and gutter system designs.

** Optional*

COLLECT STRATEGICALLY WITH DIGILOAD*

When it comes down to it, optimizing waste collection is a numbers game. How much waste is each customer producing? How much payload is available on the truck? The only way to know is by weighing.

The DIGILOAD system has been designed to capture all the data you need without losing collection time and eliminating operator error. Strategically installed sensors detect the actual weight of the material in the waste bin while it is in motion.

This system eliminates repetitive calibration and lets the operator focus on more important tasks. With DIGILOAD you will be able to:

- calculate weight for each customer pick-up;
- charge according to weight;
- evaluate profitability;
- optimize your payload;
- organize your routes according to container weight.

THE BENEFITS OF CHOOSING DIGILOAD OUTWEIGH THE COST:

- **OPTIMIZATION:** Collect data to better manage routes
- **SEAMLESS OPERATION:**
  - 98% accuracy for payload determination
  - Zero wait time to take a measurement
  - Eliminate operator error
- **INCREASED REVENUE:** Improve profitability by determining customer usage
- **LOW MAINTENANCE:** 10 times lower replacement sensor cost

** Optional*

LABRIE CNG: DELIVERING A CLEANER WAY OF DOING BUSINESS SINCE 2001

With the high volatility of diesel prices, fuel choice has never been more important. At Labrie, we believe in greener, safer, smarter and more efficient waste collection vehicles. This is what we have been designing and building for the past 25 years.

We deliver the highest-quality, factory–installed compressed natural gas (CNG) solutions that are fully tested at our on-site CNG station. Our manufacturing expertise in CNG is passed along to you with every vehicle.

You benefit from a trusted source of expertise when it comes to converting to CNG.

THE BENEFITS OF CHOOSING CNG ARE HUGE:

- **AFFORDABLE** : Substantially reduced fuel costs when compared to diesel
- **CLEAN**: 23% less Greenhouse Gas Emissions compared to diesel fuel
- **FOREIGN FUEL INDEPENDENCE**: 98% of fuel supplied from the U.S. and Canada
- **QUIET**: 10 decibels more quiet than a diesel truck

WITTKE™ CNG: EFFICIENCY AND RELIABILITY

- Integrated roof mounted design, 4 or 5 tanks, 60 to 75 DGE*
- Innovative placement of guard covers, delivering complete & easy access
- Lightest CNG frontloader in the industry for maximum legal payload

** other setups available (up to 97DGE)*

CNG

CNG READY SINCE 2001

PREMIUM PRODUCTS COME WITH PREMIUM SUPPORT.

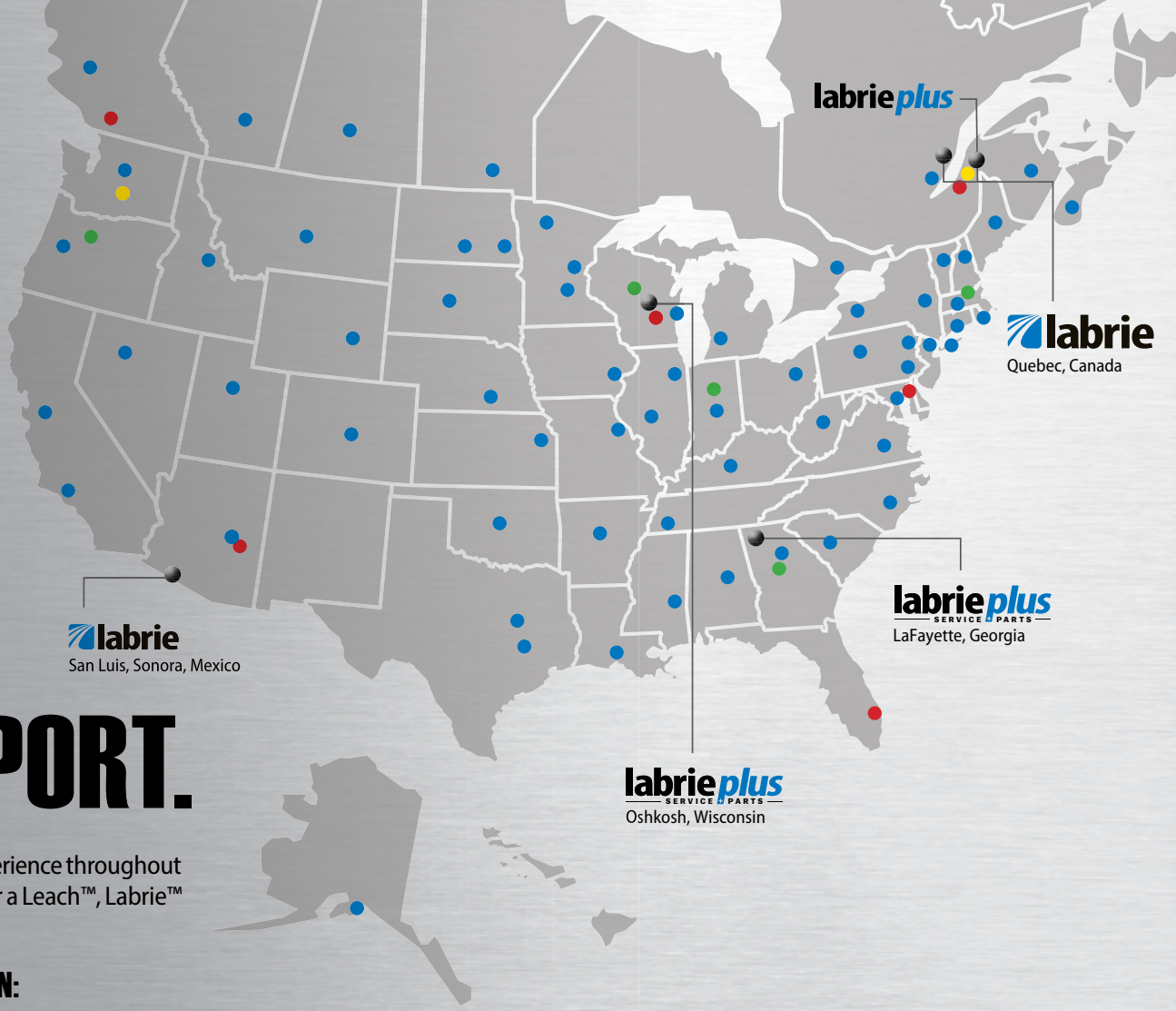

Labrie is committed to delivering the ultimate ownership experience throughout North America. Our pursuit of excellence continues long after a Leach™, Labrie™ or Wittke™ is put into service.

OUR NORTH AMERICAN NETWORK IS QUALITY DRIVEN:

- **Labrieplus 24/7 customer support system,** provides quality replacement parts, premium hands-on field and live assistance. Peace of mind guaranteed.
- **A network of over 45 premium distributors** located throughout the United States and Canada are highly trained to assist you; providing live assistance from a dedicated staff of professional representatives to support all of our Leach™, Labrie™ and Wittke™ products.

- Premium Distributor Locations
- Regional Sales Managers
- Field Service Representatives
- Technical Advisors / Demo Operators

Visit **www.labriegroup.com**
to view a complete listing of our premium distributor network

Body Dimensions

	32v³ (30+2)	34v³ (30+4)	36v³ (30+6)	36v³ (34+2)	38v³ (34+4)	40v³ (34+6)	40v³ (38+2)	42v³ (38+4)	44v³ (38+6)
A. Overall Length with Arms Stowed. Tailgate Closed (in.)	245	260	275	269	284	299	296	311	326
Overall Width (in.)	102	102	102	102	102	102	102	102	102
B. Overall Height Above Frame with Arms Stowed. Tailgate Closed (in.)	118	118	118	118	118	118	118	118	118
C. Overall Length with Arms Stowed. Tailgate Open (in.)	308	308	308	331	331	331	358	358	358
D. Overall Height Above Frame with Arms Stowed. Tailgate Open (in.)	178	178	178	178	178	178	178	178	178
E. Overall Length With Arms/Forks Down. Tailgate Closed (in.)	414	429	444	438	453	468	465	480	495
F. Overall Height Above Frame With Arms/Forks Down. Tailgate Closed (in.)	110	110	110	110	110	110	110	110	110
G. Overall Length With Arms/Forks Down. Tailgate Open (in.)	476	476	476	500	500	500	527	527	527
H. Overall Height Above Frame with Arms Stowed/Forks Up. Tailgate Closed	175	175	175	175	175	175	175	175	175

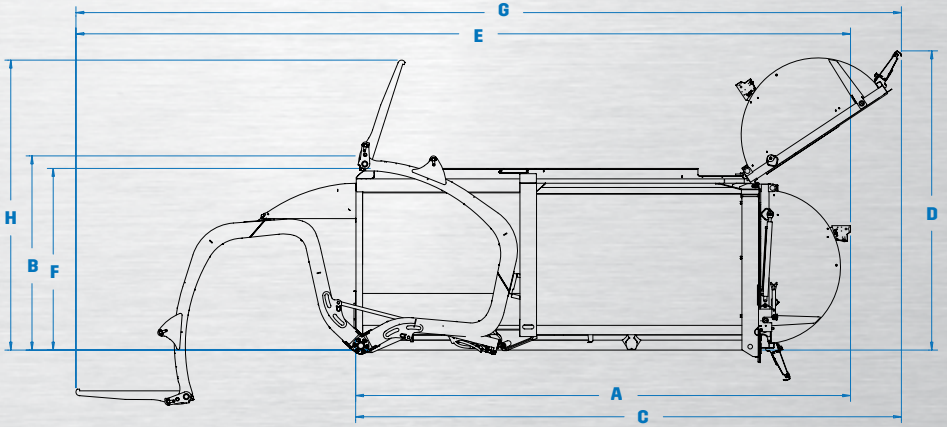

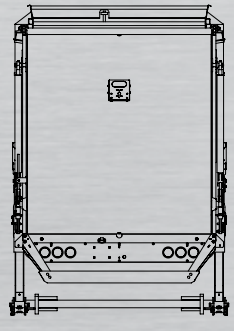

WITTKE

Performances	Starlight	Superduty
Arms Up	12 - 14 sec @ 700 rpm	12 - 14 sec @ 700 rpm
Arms Down	10 - 12 sec @ 700 rpm	10 - 12 sec @ 700 rpm
Forks Up	3.5 - 4.5 sec @ 700 rpm	3.5 - 4.5 sec @ 700 rpm
Forks Down	3.5 - 4.5 sec @ 700 rpm	3.5 - 4.5 sec @ 700 rpm
Packer Extend	14 - 18 sec @ 1500 rpm	14 - 18 sec @ 1500 rpm
Packer Retract	5 - 6 sec @ 700 rpm	5 - 6 sec @ 700 rpm
Top Door complete cycle	13 - 17 sec @ 700 rpm	13 - 17 sec @ 700 rpm
Tailgate Open	21 sec @ 700 rpm	21 sec @ 700 rpm
Tailgate Close (with Safety Flow limiter)	26 sec @ 700 rpm	26 sec @ 700 rpm
Arm Specifications	Starlight	Superduty
Arm Construction	10,000 lbs load rated arms	10,000 lbs charge nominale
Arm Thickness	4"	4"
Arm Side Plates	1/4" 100 XF 100,000psi	1/4" 100 XF 100,000psi
Arm Lifting Capacity	8,000 lbs	8,000 lbs (10,000 lbs en option)

Body Specifications	Starlight	Superduty
Body Floor	0.157" AR450 175,000psi	3/16" AR450 175,000psi
Body Sides	0.118" 100 XF 100,000psi	0.157" AR450 175,000psi
Body Roof	12ga A1011 80,000psi	0.157" AR450 175,000psi
Tailgate	12ga A1011 80,000psi	0.157" AR450 175,000psi
Fork Specifications	Starlight	Superduty
Forks Thickness	1" Weldox 700 100,000psi	1-1/2" Weldox 700 100,000psi
Packer Specifications	Starlight	Superduty
Compaction ratio (lbs/yd³)	600	650
Packer Panel Lower Face Plate	3/16" AR450 175,000psi	3/16" AR450 175,000psi (1/4" sur bennes de 34v³)
Packer Panel Upper Face Plate	0.157" AR450 175,000psi	0.157" AR450 175,000psi
Bottom Packer Wear Shoes	3/8" AR450 175,000psi (Chromium optional)	3/8" AR450 175,000psi (Chromium en option)

Hopper Specifications	Starlight	Superduty
Hopper Size (yd³)	12	12
Hopper Width	80"	80"
Hopper Floor	3/16" AR450 175,000psi	1/4" AR450 175,000psi
Hopper Sides (upper)	0.118" 100 XF 100,000psi	3/16" AR450 175,000psi
Cylinder Specifications	Starlight	Superduty
Packer Cylinders (30yd³ bodies)	3 stages 5-1/2" bore x 133-9/16" stroke	-
Packer Cylinders (34yd³ bodies)	3 stages 5-1/2" bore x 167-13/16" stroke	3 étapes 5-1/2" alésage x 167-13/16" course
Packer Cylinders (38yd³ bodies)	3 stages 5-1/2" bore x 181-1/2" stroke	3 étapes 5-1/2" alésage x 181-1/2" course
Arm Cylinders (8,000 lbs Lifting capacity)	4-1/2" bore x 2" rod x 45-3/8" stroke	4-1/2" alésage x 2" tige x 45-3/8" course
Fork Cylinders	3-1/2" bore x 1-3/4" rod x 18-7/8" stroke	3-1/2" alésage x 1-3/4" tige x 18-7/8" course
Tailgate Cylinders	2-1/2" bore x 1-3/4" rod x 39" stroke	2-1/2" alésage x 1-3/4" tige x 39" course
Top Door Cylinder	2-1/2" bore x 1-1/2" rod x 92" stroke	2-1/2" alésage x 1-1/2" tige x 92" course
Hydraulics	Starlight	Superduty
Pump Make & Model	Muncie Live Pak (gear)	Muncie Live Pak (à engrenage)
Pump Capacity	60 gpm @ 1500 rpm	60 gpm @ 1500 rpm
Max. Operating Pressure	2,500 psi	2,750 psi
Oil Reservoir	74 gal	74 gal

Note: Specifications subject to change without notice

THE LABRIE GROUP

The Labrie Group is one of the largest manufacturer's of refuse and recycling collection vehicles in North America. Our product lines of Labrie™, Leach™, and Wittke™ are renowned to be the most reliable, efficient, productive, and innovative in the solid waste industry today.

Throughout our history, we have been recognized for the design and production of the highest quality vehicles available on the market, while our customers benefit from a single trusted source of engineering expertise.

At Labrie we continually push the boundaries of innovation to provide a greener, safer, smarter and more efficient way of waste management and collection.

We are committed to building and delivering the finest refuse collection equipment in the industry to suit all of your collection needs. With the strongest dealer network in the industry (over 45 distribution points across the continent), our stock and demo program, engineering expertise, and the Labrieplus 24/7 customer support center,

Labrie delivers the ultimate ownership experience. Labrieplus is Labrie's full service customer support center located in the U.S. Its mission is to provide quality replacement parts and premium hands-on field support to Labrie equipment owners. Labrieplus is the single source for Labrie™, Leach™, Wittke™ and Pendpac™ OEM and selected all makes of parts.

DRIVE EXCELLENCE

Labrie LEACH WITTKE

Labrie is certified ISO 9001-2008 and attests to the quality of these products. Labrie has made every reasonable effort to ensure that the information contained in this brochure is accurate. However, we accept no responsibility for any errors or omissions, and we reserve the right to modify designs, characteristics and products at any time. Contact Labrie for prices and options or to obtain the phone number of your local Labrie distributor. For the most recent version of our spec sheets, please go to Labrie website at www.labriegroup.com. In case of discrepancy, the Web version takes precedence over any printed literature.
© Labrie Enviroquip Group 2020. - Printed in USA

labrie

Corporate Office
175-B, route Marie-Victorin,
Levis, Quebec, Canada, G7A 2T3
Toll Free: 800 463-6638 ▪ Phone: 418 831-8250
info@labriegroup.com ▪ www.labriegroup.com

labrieplus SERVICE & PARTS

Parts & Service
1198 Shattuck Industrial Boulevard
LaFayette, GA 30728
Phone: 1-706-628-2467
www.labrieplusparts.com

Parts & Service
445, 1e avenue
Levis, Québec
Canada, G6W 5M6
Toll Free: 1-877-452-2743
https://labrieparts.labriegroup.com

153121 / 02212021