MODEL	FARMALL 50A	FARMALL 55A	FARMALL 60A	FARMALL 65A	FARMALL 65C
SERIES CLASSIFICATION	*STANDARD*				*DELUXE*
Operator Station	Non-cab	Cab	Non-cab	Cab	Cab
Traction	2WD/MFD				MFD
ENGINE					
Type	3-cylinder, Tier 4 B/Final, FPT turbocharged & aftercooled				4-cylinder, Tier 4 B/Final, FPT turbocharged
Displacement	2.2 L	2.9 L	2.2 L	2.9 L	3.4 L
Engine HP[1]	53	54	60	64	64
PTO HP[1]	45	43	51	51	50
Rated Engine RPM	2,600	2,300	2,600	2,300	
TRANSMISSION / PTO					
Standard	8×8 Mechanical shuttle (dry clutch)				12×12 Power shuttle (wet clutch)
Optional	N/A	12×12 Power shuttle (wet clutch) or 12×12 with creeper	N/A	12×12 Power shuttle (wet clutch) or 12×12 with creeper	N/A
Differential Lock	Mechanical				
MFD Engagement	Mechanical	Electrohydraulic	Mechanical	Electrohydraulic	
PTO Speed (Standard / Optional)	540 / 540E	540 / 540/540E	540 / 540E	540 / 540/540E	540 / 540/540E
AXLES					
Front	2WD or MFD with limited slip				MFD with limited slip
Rear	Flange				
HYDRAULICS / HITCH					
Type	Open center				
Rear Remotes (Standard / Optional)	1 / 2	2 / 3	1 / 2	2 / 3	
Implement Pump / Flow[1]	11.9 gpm (45 L)	12.6 gpm (47.7 L)	11.9 gpm (45 L)	12.6 gpm (47.7 L)	12.5 gpm (47.5 L)
3-point Hitch Category and Draft Sensing Type	1/2, Mechanical Draft Control (MDC) top link sensing				
Lower Link End / Stabilizer Type	Flex ends / Telescopic stabilizers	Fixed ends (flex ends optional) / Telescopic stabilizers	Flex ends / Telescopic stabilizers	Fixed ends (flex ends optional) / Telescopic stabilizers	Flex ends / Telescopic stabilizers
Lift Capacity @ 24 in. Behind Pin (Standard / Optional)	2,701 lb. (1 225 kg) / N/A	4,299 lb. (1 950 kg)/ 4,740 lb. (2 150 kg)	2,701 lb. (1 225 kg) / N/A	4,299 lb. (1 950 kg) / 4,740 lb. (2 150 kg)	3,664 lb. (1 662 kg) / N/A
CAPACITIES					
Fuel Tank (Cab / Non-Cab)	Not offered / 17.2 gal (65 L)	21.7 gal (82 L) / Not offered	Not offered / 17.2 gal (65 L)	21.7 gal (82 L) / Not offered	23.8 gal (90 L) / Not offered
Diesel Exhaust Fluid Tank	No DEF required				
DIMENSIONS & WEIGHTS					
Wheelbase (2WD/MFD)	96.5 in. (2 450 mm) / 97.6 in. (2 478 mm)	81.2 in. (2 063 mm) / 81.8 in. (2 078 mm)	96.5 in. (2 450 mm) / 97.6 in. (2 478 mm)	81.2 in. (2 063 mm) / 81.8 in. (2 078 mm)	N/A / 84 in. (2 132 mm)
Overall Length (2WD/MFD)	129.5 in. (3 290 mm) / 134.0 in. (3 404 mm)	151.8 in. (3 856 mm)	129.5 in. (3 290 mm) / 134.0 in. (3 404 mm)	151.8 in. (3 856 mm)	
Minimum Height (ROPS Folded)	75.9 in. (1 930 mm)	Not offered	77 in. (1 957 mm)	Not offered	
Overall Height MFD (Top of Cab)	Not offered	100 in. (2 545 mm)	Not offered	100 in. (2 545 mm)	98 in. (2 495 mm)
Weight w/o Ballast (Cab/Non-Cab 2WD)	Not offered / 4,442 lb. (2 015 kg)	6,173 lb. (2 800 kg) / Not offered	Not offered / 4,442 lb. (2 015 kg)	6,173 lb. (2 800 kg) / Not offered	Not offered
Weight w/o Ballast (Cab/Non-Cab MFD)	Not offered / 5,060 lb. (2 295 kg)	6,834 lb. (3 100 kg) / Not offered	Not offered / 5,060 lb. (2 295 kg)	6,834 lb. (3 100 kg) / Not offered	6,239 lb. (2 830 kg) / Not offered

[1] At rated engine RPM

MODEL	FARMALL 70A	FARMALL 75A	FARMALL 75C
SERIES CLASSIFICATION	*STANDARD*		*DELUXE*
Operator Station	Non-cab	Cab/Non-cab	Cab/Non-cab
Traction	2WD/MFD	2WD/MFD	2WD[2]/MFD
ENGINE			
Type	3-cylinder, Tier 4 B/Final, FPT turbocharged & aftercooled		4-cylinder, Tier 4 B/Final, FPT turbocharged
Displacement	2.2 L	2.9 L	3.4 L
Engine HP[1]	70	74	74
PTO HP[1]	61	60	64
Rated Engine RPM	2,600	2,300	
TRANSMISSION / PTO			
Standard	8×8 Mechanical shuttle (dry clutch)		12×12 Power shuttle (wet clutch)
Optional	N/A	12×12 Power shuttle (wet clutch) or 12×12 with creeper	8×8 Power shuttle (wet clutch) 12×12 Power shuttle (wet clutch) with creeper
Differential Lock	Mechanical		
MFD Engagement	Mechanical	Electrohydraulic	Electrohydraulic
PTO Speed (Standard / Optional)	540 / 540E	540 / 540/540E	540 / 540/540E
AXLES			
Front	2WD or MFD with limited slip		HD 2WD or MFD with limited slip
Rear	Flange		
HYDRAULICS / HITCH			
Type	Open center		
Rear Remotes (Standard / Optional)	1 / 2	2 / 3	2 / 3
Implement Pump / Flow[1]	11.9 gpm (45 L)	12.6 gpm (47.7 L)	12.5 gpm (47.5 L)
3-point Hitch Category and Draft Sensing Type	1/2, Mechanical Draft Control (MDC) top link sensing		
Lower Link End / Stabilizer Type	Flex ends / Telescopic stabilizers	Fixed ends (flex ends optional) / Telescopic stabilizers	Flex ends / Telescopic stabilizers
Standard Lift Capacity @ 24 in. Behind Pin (Standard / Optional)	2,701 lb. (1 225 kg) / N/A	4,299 lb. (1 950 kg) / 4,740 lb. (2 150 kg)	3,664 lb. (1 662 kg), / N/A
CAPACITIES			
Fuel Tank (Cab / Non-Cab)	Not offered / 17.2 gal (65 L)	21.7 gal (82 L)	23.8 gal (90 L)
Diesel Exhaust Fluid Tank	No DEF required		
DIMENSIONS & WEIGHTS			
Wheelbase (2WD/MFD)	96.5 in. (2 450 mm) / 97.6 in. (2 478 mm)	81.2 in. (2 063 mm) / 81.8 in. (2 078 mm)	86 in. (2 180 mm) / 84 in. (2 132 mm)
Overall Length (2WD/MFD)	129.5 in. (3 290 mm) / 134.0 in. (3 404 mm)	151.8 in. (3 856 mm)	153 in. (3 884 mm) / 151 in. (3 838 mm)
Minimum Height (ROPS Folded)	77 in. (1 957 mm)	67.7 in. (1 720 mm)	77.6 in. (1 972 mm)
Overall Height MFD (Top of Cab)	Not offered	100 in. (2 545 mm)	98 in. (2 495 mm)
Weight w/o Ballast (Cab/Non-Cab 2WD)	Not offered / 4,442 lb. (2 015 kg)	6,173 lb. (2 800 kg) / 5,622 lb. (2 550 kg)	5,622 lb. (2 550 kg) / 5,027 lb. (2 280 kg)
Weight w/o Ballast (Cab/Non-Cab MFD)	Not offered / 5,060 lb. (2 295 kg)	6,834 lb. (3 100 kg) / 6,283 lb. (2 850 kg)	6,239 lb. (2 830 kg) / 5,512 lb. (2 500 kg)

[1] At rated engine RPM [2] 2WD not available on Hi-Lo models

MODEL	FARMALL 90C	FARMALL 95A	FARMALL 100C	FARMALL 105A	FARMALL 110C
SERIES CLASSIFICATION	*DELUXE*	*STANDARD*	*DELUXE*	*STANDARD*	*DELUXE*
Operator Station	Cab/Non-cab				
Traction	2WD[2] / MFD	2WD / MFD	2WD[2] / MFD	2WD / MFD	2WD[2] / MFD
ENGINE					
Type	4-cylinder, Tier 4 B/Final, FPT turbocharged & aftercooled				
Displacement	3.4 L				
Engine HP[1]	86	97	99	112	107
PTO HP[1]	73	78	85	92	93
Rated Engine RPM	2,300				
TRANSMISSION / PTO					
Standard	12×12 Power shuttle (wet clutch)	12×12 Power shuttle (wet clutch), creeper ready (20×20)	12×12 Power shuttle (wet clutch)	12×12 Power shuttle (wet clutch), creeper ready (20×20)	12×12 Power shuttle (wet clutch)
Optional	12×12 Power shuttle (wet clutch) w/ creeper 24×24 Hi-Lo (wet clutch) w/ electrohydraulic shuttle	12×12 Mechanical shuttle (dry clutch), creeper ready (20×20)	12×12 Power shuttle (wet clutch) w/ creeper 24×24 Hi-Lo (wet clutch) w/ electrohydraulic shuttle	12×12 Mechanical shuttle (dry clutch), creeper ready (20×20)	12×12 Power shuttle (wet clutch) w/ creeper 24×24 Hi-Lo (wet clutch) w/ electrohydraulic shuttle
Differential Lock	12×12: Mechanical; Hi-Lo: Electrohydraulic	Mechanical	12×12: Mechanical; Hi-Lo: Electrohydraulic	Mechanical	12×12: Mechanical; Hi-Lo: Electrohydraulic
MFD Engagement	Electrohydraulic				
PTO Speed (Standard / Optional)	12×12: 540 / 540/1,000; Hi-Lo: 540/1,000	540 / 540/540E / 540/1,000	12×12: 540 / 540/1,000; Hi-Lo: 540/1,000	540 / 540/540E / 540/1,000	12×12: 540 / 540/1,000; Hi-Lo: 540/1,000
AXLES					
Front	12×12: HD 2WD or MFD or HD MFD with limited slip Hi-Lo: HD MFD with limited slip	2WD or MFD with limited slip	12×12: HD 2WD or MFD or HD MFD with limited slip Hi-Lo: HD MFD with limited slip	2WD or MFD with limited slip	12×12: HD 2WD or MFD or HD MFD with limited slip Hi-Lo: HD MFD with limited slip
Rear	Flange				
HYDRAULICS / HITCH					
Type	Open center				
Rear Remotes (Standard / Optional)	2 / 3				
Implement Pump / Flow[1]	16.9 gpm (64 L)				
3-point Hitch Category and Draft Sensing Type	2, 12×12 MDC top link sensing Hi-Lo Cab EDC lower link Hi-Lo Non-cab MDC top link	1/2, Mechanical Draft Control (MDC) top link	2, 12×12 MDC top link sensing Hi-Lo Cab EDC lower link Hi-Lo Non-cab MDC top link	1/2, Mechanical Draft Control (MDC) top link	2, 12×12 MDC top link sensing Hi-Lo Cab EDC lower link Hi-Lo Non-cab MDC top link
Lower Link End / Stabilizer Type	Flex ends / Telescopic stabilizers				
Standard Lift Capacity @ 24 in. Behind Pin (Standard / Optional)	4,339 lb. (1 968 kg) / 5,620 lb. (2 549 kg)	3,200 lb. (1 451 kg) / 7,716 lb. (3 500 kg)	4,339 lb. (1 968 kg) / 5,620 lb.(2 549 kg)	3,200 lb. (1 451 kg) / 7,716 lb. (3 500 kg)	4,339 lb. (1 968 kg) / 5,620 lb. (2 549 kg)
CAPACITIES					
Fuel Tank (Cab / Non-Cab)	42.3 gal (160 L)	29 gal. (110 L) / 23 gal. (90 L)	42.3 gal (160 L)	29 gal. (110 L) / 23 gal. (90 L)	42.3 gal (160 L)
Diesel Exhaust Fluid Tank	2.5 gal (9.6 L)	2.9 gal. (11 L)	2.5 gal (9.6 L)	2.9 gal. (11 L)	2.5 gal (9.6 L)
DIMENSIONS & WEIGHTS					
Wheelbase (2WD / MFD)	92 in. (2 343 mm) / 90 in. (2 285 mm)	91 in. (2 310 mm) / 89 in. (2 260 mm)	92 in. (2 343 mm) / 90 in. (2 285 mm)	91 in. (2 310 mm) / 89 in. (2 260 mm)	92 in. (2 343 mm) / 90 in. (2 285 mm)
Overall Length (2WD / MFD)	163 in. (4 144 mm) / 161 in. (4 086 mm)	161.6 in. (4 105 mm)	163 in. (4 144 mm) / 161 in. (4 086 mm)	161.6 in. (4 105 mm)	163 in. (4 144 mm) / 161 in. (4 086 mm)
Minimum Height (ROPS Folded)	82.9 in. (2 106 mm)[3]	72.8 in. (1 849 mm)[4]	82.9 in. (2 106 mm)[3]	72.8 in. (1 849 mm)[4]	82.9 in. (2 106 mm)[3]
Overall Height MFD (Top of Cab)	102.2 in. (2 595 mm)[3]	106 in. (2 690 mm)[4]	102.2 in. (2 595 mm)[3]	106 in. (2 690 mm)[4]	102.2 in. (2 595 mm)[3]
Weight w/o Ballast (Cab/Non-Cab 2WD)	7,253 lb. (3 290 kg) / 6,768 lb. (3 070 kg)	8,173 lb. (3 715 kg) / 7,304 lb. (3 320 kg)	7,253 lb. (3 290 kg) / 6,768 lb. (3 070 kg)	8,173 lb. (3 715 kg) / 7,304 lb. (3 320 kg)	7,253 lb. (3 290 kg) / 6,768 lb. (3 070 kg)
Weight w/o Ballast (Cab/Non-Cab MFD)	8,157 lb. (3 700 kg) / 7,672 lb. (3 480 kg)	8,492 lb. (3 860 kg) / 7,689 lb. (3 495 kg)	8,157 lb. (3 700 kg) / 7,672 lb. (3 480 kg)	8,492 lb. (3 860 kg) / 7,689 lb. (3 495 kg)	8,157 lb. (3 700 kg) / 7,672 lb. (3 480 kg)

[1] At rated engine RPM [2] 2WD not available on Hi-Lo models [3] With 18.4R34 rear tires [4] With 16.9-34 rear tires

MODEL	FARMALL 110U	FARMALL 115A	FARMALL 120C	FARMALL 120U
SERIES CLASSIFICATION	*PREMIUM*	*STANDARD*	*DELUXE*	*PREMIUM*
Operator Station	Cab	Cab/Non-cab	Cab/Non-cab	Cab
Traction	MFD	2WD/MFD	2WD[2]/MFD	MFD
ENGINE				
Type	4-cylinder, Tier 4 B/Final, FPT turbocharged & aftercooled			
Displacement	3.4 L			
Engine HP[1]	107	120	117	117
PTO HP[1]	93	100	100	100
Rated Engine RPM	2,300			
TRANSMISSION / PTO				
Standard	ActiveDrive 4 16×16 Semi-power shift	12×12 Power shuttle (wet clutch), creeper ready (20×20)	12×12 Power shuttle (wet clutch)	ActiveDrive 4 16×16 Semi-power shift
Optional	ActiveDrive 4 16×16 Semi-power shift	12×12 Mechanical shuttle (dry clutch), creeper ready (20×20)	12×12 Power shuttle (wet clutch) w/ creeper 24×24 Hi-Lo (wet clutch) w/ electrohydraulic shuttle	ActiveDrive 4 16×16 Semi-power shift
Differential Lock	Electrohydraulic	Mechanical	12×12: Mechanical; Hi-Lo: Electrohydraulic	Electrohydraulic
MFD Engagement	Electrohydraulic			
PTO Speed (Standard / Optional)	540/1,000 / 540/540E/1,000	540 / 540/540E / 540/1,000	12×12: 540/540E / 540/1,000 Hi-Lo: 540/540E or 540/1,000	540/1,000 / 540/540E/1,000
AXLES				
Front	Standard MFD front axle/ Suspended MFD front axle	2WD or MFD with limited slip	12×12: HD 2WD or HD MFD with limited slip; Hi-Lo: HD MFD with limited slip	Standard MFD front axle/ Suspended MFD front axle
Rear	Flange			
HYDRAULICS / HITCH				
Type	Open center system, closed center load sensing (CCLS) remotes	Open center		Open center system, closed center load sensing (CCLS) remotes
Rear Remotes (Standard / Optional)	2 mechanical with configurable detents / 3 mechanical, 2 with configurable detents	2 / 3		2 mechanical with configurable detents / 3 mechanical, 2 with configurable detents
Implement Pump / Flow[1]	21.1 gpm (80 L)	16.9 gpm (64 L)		21.1 gpm (80 L)
3-point Hitch Category and Draft Sensing Type	2, Mechanical Draft Control (MDC) top link	1/2, Mechanical Draft Control (MDC) top link	2, 12×12 MDC top link sensing Hi-Lo Cab EDC lower link Hi-Lo Non-cab MDC top link	2, Mechanical Draft Control (MDC) top link
Lower Link End / Stabilizer Type	Flex ends / Telescopic stabilizers			
Standard Lift Capacity @ 24 in. Behind Pin (Standard / Optional)	8,809 lb. (3 996 kg) / N/A	3,200 lb. (1 451 kg) / 7,716 lb. (3 500 kg)	4,339 lb. (1 968 kg) / 5,620 lb. (2 549 kg)	8,809 lb. (3 996 kg) / N/A
CAPACITIES				
Fuel Tank (Cab / Non-Cab)	43.6 gal. (165 L)	29 gal. (110 L) / 23 gal. (90 L)	42.3 gal. (160 L)	43.6 gal. (165 L)
Diesel Exhaust Fluid Tank	3.2 gal. (12 L)	2.9 gal. (11 L)	2.5 gal (9.6 L)	3.2 gal. (12 L)
DIMENSIONS & WEIGHTS				
Wheelbase (2WD / MFD)	Not offered / 93.7 in. (2 380 mm)	91 in. (2 310 mm) / 89 in. (2 260 mm)	92 in. (2 343 mm) / 90 in. (2 285 mm)	Not offered / 93.7 in. (2 380 mm)
Overall Length (2WD / MFD)	165 in. (4 191 mm)	161.6 in. (4 105 mm)	163 in. (4 144 mm) / 161 in. (4 086 mm)	165 in. (4 191 mm)
Minimum Height (ROPS Folded)	Not offered	72.8 in. (1 849 mm)[3]	82.9 in. (2 106 mm)[4]	Not offered
Overall Height MFD (Top of Cab)	107 in. (2 720 mm)	106 in. (2 690 mm)[3]	102.2 in. (2 595 mm)[4]	107 in. (2 720 mm)
Weight w/o Ballast (Cab/Non-Cab 2WD)	Not offered	8,173 lb. (3 715 kg) / 7,304 lb. (3 320 kg)	7,253 lb. (3 290 kg) / 6,768 lb. (3 070 kg)	Not offered
Weight w/o Ballast (Cab/Non-Cab MFD)	10,031 lb. (4 550 kg) / Not offered	8,492 lb. (3 860 kg) / 7,689 lb. (3 495 kg)	8,157 lb. (3 700 kg) / 7,672 lb. (3 480 kg)	10,031 lb. (4 550 kg) / Not offered

[1] At rated engine RPM [2] 2WD not available on Hi-Lo models [3] At 1,535 engine rpm [4] With 18.4R34 rear tires

MODEL	FARMALL 110A	FARMALL 120A	FARMALL 130A	FARMALL 140A
SERIES CLASSIFICATION	*STANDARD*			
Operator Station	Cab	Cab/Non-cab	Cab	Cab/Non-cab
Traction	MFD		2WD/MFD	2WD (cab only)/MFD
ENGINE				
Type	4-cylinder, Tier 4 B/Final, FPT turbocharged & aftercooled			
Displacement	4.5 L			
Engine HP[1]	110	120	130	140
PTO HP[1]	90	96	105	115
Rated Engine RPM	2,200			
TRANSMISSION / PTO				
Standard	8×8 Power shuttle (wet clutch)			
Optional	16×8 Power shuttle (wet clutch)			
Differential Lock	Electrohydraulic			
MFD Engagement	Electrohydraulic			
PTO Speed (Standard / Optional)	540/1,000			
AXLES				
Front	HD MFD with limited slip		HD 2WD or HD MFD with limited slip	
Rear	Flange/bar			
HYDRAULICS / HITCH				
Type	Open center system, closed center load sensing (CCLS) remotes		Open center system, closed center load sensing (CCLS) remotes	
Rear Remotes (Standard / Optional)	2 / 3 or 4			
Implement Pump / Flow[1]	22 gpm (83 L)			
3-point Hitch Category and Draft Sensing Type	2, Mechanical Draft Control (MDC) Top link sensing			
Lower Link End / Stabilizer Type	Flex ends / Telescopic stabilizers			
Standard Lift Capacity @ 24 in. Behind Pin (Standard / Optional)	7,200 lb. (3 266 kg) / 5,400 lb. (2 449 kg)			
CAPACITIES				
Fuel Tank (Cab / Non-Cab)	56.8 gal. (215 L)			
Diesel Exhaust Fluid Tank	7.9 gal. (30 L)			
DIMENSIONS & WEIGHTS				
Wheelbase (2WD / MFD)	Not offered / 103.9 in (2 640 mm)		95.7 in (2 432 mm) / 103.9 in (2 640 mm)	
Overall Length (2WD / MFD)	184.7 in. (4 690 mm)			
Minimum Height (ROPS Folded)	Not offered	90.6 in. (2 300 mm)	Not offered	90.6 in. (2 300 mm)
Overall Height MFD (Top of Cab)	110.2 in. (2 800 mm)[2]			
Weight w/o Ballast (Cab/Non-Cab 2WD)	Not offered	Not offered	9,414 lb. (4 270 kg) / Not offered	
Weight w/o Ballast (Cab/Non-Cab MFD)	10,538 lb. (4 780 kg) / Not offered		10,648 lb. (4 830 kg) / Not offered	10,648 lb. (4 830 kg) / 9,965 lb. (4 520 kg)

[1] At rated engine RPM [2] With 18.4R38 rear tires

TIRE SELECTIONS AVAILABLE FROM THE FACTORY.

SMALL UTILITY

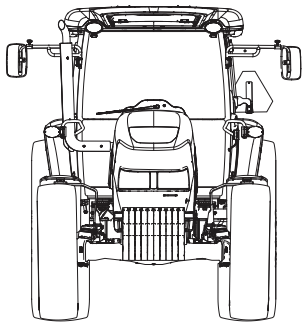

FARMALL UTILITY MODEL	50A	55A	60A	65A	65C	70A	75A	75C
Agricultural tread (R-1)	✓	✓	✓	✓	✓	✓	✓	✓
Turf tread (R-3)	✓		✓		✓	✓		✓
Industrial tread (R-4)	✓	✓	✓	✓	✓	✓	✓	✓

MEDIUM UTILITY

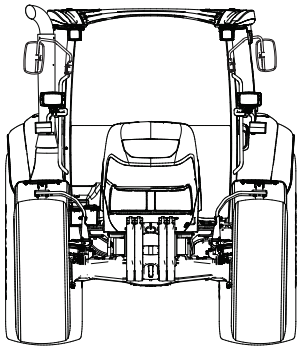

FARMALL UTILITY MODEL	90C	95A	100C	105A	110C	110U	115A	120C	120U
Agricultural tread (R-1)	✓	✓	✓	✓	✓	✓	✓	✓	✓
Turf tread (R-3)									
Industrial tread (R-4)	✓	✓	✓	✓	✓		✓	✓	

LARGE UTILITY

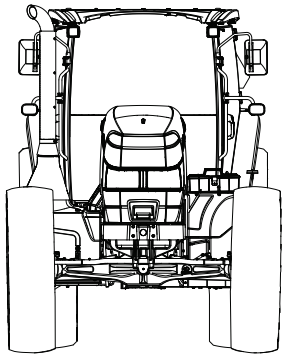

FARMALL UTILITY MODEL	110A	120A	130A	140A
Agricultural tread (R-1)	✓	✓	✓	✓
Turf tread (R-3)				
Industrial tread (R-4)				