Technical sheet :

1350 RT

MANITOU
HANDLING YOUR WORLD

Capacities		Imperial
Operating Weight		6510 lb
Operating Capacity at 35% Tipping Load		1349 lb
Operating Capacity At 50% Tipping Load		1929 lb
Tipping capacity		3858 lb
Weight and dimensions		
Overall Operating Height - Fully Raised	h27	144 in
Height to Hinge Pin – Fully Raised	h28	110 in
Reach - Fully Raised	dp1	23 in
Dump angle at full height	a5	40 °
Dump Height - Fully Raised	h29	84 in
Maximum Rollback Angle - Fully Raised	a4	98 °
Overall Height to Top of ROPS	h17	76 in
Overall length with bucket	l16	121 in
Overall Length without Bucket	l1	93 in
Specified Height	h31	59 in
Reach at Specified Height	r4	30 in
Dump angle at specified height	a17	75 °
Maximum Rollback Angle at Ground	a13	28 °
Carry Position	d5	6 in
Maximum Rollback Angle at Carry Position	a14	28 °
Digging Position	h32	0.71 in
Angle of Departure with STD Counterweight		28 °
Ground clearance	m4	8 in
Track gauge	b10	45 in
Track Shoe Width	b20	12 in
Crawler base	y2	46 in
Overall width less bucket	b1	57 in
Bucket Width	e1	60 in
Clearance Radius - Front with Bucket	b18	76 in
Clearance Circle - Rear	wa1	57 in
Track Type / Track Rollers / Roller Type		Rubber / 4 / Steel
Performances		
Ground Speed - Single Speed		6 mi/h
Drawbar Pull/Tractive Effort		7161 lb
Bucket Breakout - Tilt Cylinder		3501 lb
Bucket Breakout - Lift Cylinder		3730 lb
Engine		
Engine brand		Yanmar
Engine model		4TNV88C-KMS
Motor Type		Radial Piston
Gross Power (kW) / Power		34.30 kW / 2500 rpm
Battery		12 V
Cold Cranking Amps at Temperature (CCA)		800 A
Alternator - Voltage / Ampere		12 V / 100 A
Hydraulics		
Standard flow - Auxiliary hydraulics		63.60 l/min
Tank capacities		
Oil Pan Capacity		2 US gal
Hydraulic tank capacity		9 US gal
Fuel tank		16 US gal
Displacement / Number of cylinders		2 US gal / 4

1350 RT - Dimensional drawing

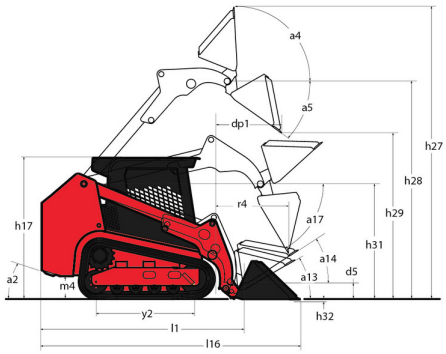

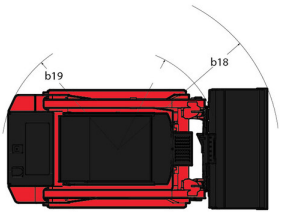

Equipment

Lifting function	
All-Tach® Attachment Mounting System	Standard
Auxiliary Hydraulics	Standard
IdealTrax™ Automatic Track Tensioning System	Standard
Lighting	
Beacon	Optional
Road Lights	Optional
Motorization/Power	
Combination Radiator & Hydraulic Oil Cooler	Standard
Dual-Element Air Cleaner with Indicator	Standard
Engine Auto-Shutdown System	Optional
Engine Block Heater	Optional
Glowplugs Starts Assist	Standard
Operator station	
Bluetooth car radio	Optional
Full-Suspension Seat	Optional
Joystick controls	Standard
Multi-Function Display Screen	Standard
ROPS/FOPS Level II Overhead Guard	Standard
Other options	
Selectable Self-Leveling Hydraulic Lift Action 4	Optional
Safety	
4 point lift	Optional
Anti-Vandalism Protection	Standard
Back-Up Alarm	Standard
Engine Alert System with Error Display	Standard
Secondary functions	
Counterweight	Optional

Siège Social
430 rue de l'Aubinière - 44150 Ancenis Cedex - France
Tel: +33(0)2 40 09 10 11 - Fax: +33 (0)2 40 09 10 97
www.manitou.com

This brochure describes versions and configuration options for Manitou products which may be fitted with different equipment. The equipment described in this brochure may be standard, optional or not available depending on version. Manitou reserves the right to change the specifications shown and described at any time and without prior warning. The manufacturer is not liable for the specifications given. For more information, contact your Manitou dealer. Non-contractual document. Product descriptions may differ from actual products. List of specifications is not comprehensive. The logos and visual identity of the company are the property of Manitou and may not be used without authorisation. All rights reserved. The photos and diagrams contained in thisbrochure are provided for information only.
MANITOU BF SA - Limited company with board of directors - Share capital: 39,668,399 euros - 857 802 508 RCS Nantes